PCAL6408A

Low-voltage translating, 8-bit I²C-bus/SMBus I/O expander with interrupt output, reset, and configuration registers

Rev. 3.2 — 19 April 2017 Product data sheet

1. General description

The PCAL6408A is an 8-bit general-purpose I/O expander that provides remote I/O expansion for most microcontroller families via the I²C-bus interface.

NXP I/O expanders provide a simple solution when additional I/Os are needed while keeping interconnections to a minimum, for example, in battery-powered mobile applications for interfacing to sensors, push buttons, keypad, etc. In addition to providing a flexible set of GPIOs, it simplifies interconnection of a processor running at one voltage level to I/O devices operating at a different (usually higher) voltage level. The PCAL6408A has built-in level shifting feature that makes these devices extremely flexible in mixed signal environments where communication between incompatible I/O voltages is required.

Its wide V_{DD} range of 1.65 V to 5.5 V on the dual power rail allows seamless communications with next-generation low voltage microprocessors and microcontrollers on the interface side (SDA/SCL) and peripherals at a higher voltage on the port side.

There are two supply voltages for PCAL6408A: $V_{DD(I2C\text{-}bus)}$ and $V_{DD(P)}$. $V_{DD(I2C\text{-}bus)}$ provides the supply voltage for the interface at the master side (for example, a microcontroller) and the $V_{DD(P)}$ provides the supply for core circuits and Port P. The bidirectional voltage level translation in the PCAL6408A is provided through $V_{DD(I2C\text{-}bus)}$. $V_{DD(I2C\text{-}bus)}$ should be connected to the V_{DD} of the external SCL/SDA lines. This indicates the V_{DD} level of the I²C-bus to the PCAL6408A, while the voltage level on Port P of the PCAL6408A is determined by the $V_{DD(P)}$.

The PCAL6408A contains the PCA6408A register set of 8-bit Configuration, Input, Output, and Polarity Inversion registers and additionally, the PCAL6408A has Agile I/O, which are additional features specifically designed to enhance the I/O. These additional features are: programmable output drive strength, latchable inputs, programmable pull-up/pull-down resistors, maskable interrupt, interrupt status register, programmable open-drain or push-pull outputs. The PCAL6408A is a pin-to-pin replacement to the PCA6408A, however, the PCAL6408A powers up with all I/O interrupts masked. This mask default allows for a board bring-up free of spurious interrupts at power-up.

At power-on, the I/Os are configured as inputs. However, the system master can enable the I/Os as either inputs or outputs by writing to the I/O configuration bits. The data for each input or output is kept in the corresponding input or output register. The polarity of the Input Port register can be inverted with the Polarity Inversion register, saving external logic gates. Programmable pull-up and pull-down resistors eliminate the need for discrete components.

The system master can reset the PCAL6408A in the event of a time-out or other improper operation by asserting a LOW in the $\overline{\text{RESET}}$ input. The power-on reset puts the registers in their default state and initializes the I²C-bus/SMBus state machine. The $\overline{\text{RESET}}$ pin causes the same reset/initialization to occur without de-powering the part.

The PCAL6408A open-drain interrupt ($\overline{\text{INT}}$) output is activated when any input state differs from its corresponding Input Port register state and is used to indicate to the system master that an input state has changed.

$\overline{\text{INT}}$ can be connected to the interrupt input of a microcontroller. By sending an interrupt signal on this line, the remote I/O can inform the microcontroller if there is incoming data on its ports without having to communicate via the I²C-bus. Thus, the PCAL6408A can remain a simple slave device. The input latch feature holds or latches the input pin state and keeps the logic values that created the interrupt until the master can service the interrupt. This minimizes the host's interrupt service response for fast moving inputs.

The device Port P outputs have 25 mA sink capabilities for directly driving LEDs while consuming low device current.

One hardware pin (ADDR) can be used to program and vary the fixed I²C-bus address and allow up to two devices to share the same I²C-bus or SMBus.

2. Features and benefits

- I²C-bus to parallel port expander
- Operating power supply voltage range of 1.65 V to 5.5 V
- Allows bidirectional voltage-level translation and GPIO expansion between:
  - 1.8 V SCL/SDA and 1.8 V, 2.5 V, 3.3 V or 5 V Port P
  - 2.5 V SCL/SDA and 1.8 V, 2.5 V, 3.3 V or 5 V Port P
  - 3.3 V SCL/SDA and 1.8 V, 2.5 V, 3.3 V or 5 V Port P
  - 5 V SCL/SDA and 1.8 V, 2.5 V, 3.3 V or 5 V Port P
- Low standby current consumption of 1 μA
- Schmitt-trigger action allows slow input transition and better switching noise immunity at the SCL and SDA inputs
  - V_{hys} = 0.18 V (typical) at 1.8 V
  - V_{hys} = 0.25 V (typical) at 2.5 V
  - V_{hys} = 0.33 V (typical) at 3.3 V
  - V_{hys} = 0.5 V (typical) at 5 V
- 5 V tolerant I/O ports
- Active LOW reset input ($\overline{\text{RESET}}$)
- Open-drain active LOW interrupt output ($\overline{\text{INT}}$)
- 400 kHz Fast-mode I²C-bus
- Internal power-on reset
- Power-up with all channels configured as inputs
- No glitch on power-up
- Noise filter on SCL/SDA inputs
- Latched outputs with 25 mA drive maximum capability for directly driving LEDs
- Latch-up performance exceeds 100 mA per JESD 78, Class II

All information provided in this document is subject to legal disclaimers.

© NXP Semiconductors N.V. 2017. All rights reserved.

- ESD protection exceeds JESD 22
  - 2000 V Human-Body Model (A114-A)
  - 1000 V Charged-Device Model (C101)
- Packages offered: HVQFN16, TSSOP16, XQFN16, XFBGA16 (1.6 mm × 1.6 mm × 0.5 mm), X2QFN16 (LGA, Land Grid Array) 1.6 mm x 1.6 mm x 0.35 mm

2.1 Agile I/O features

- Software backward compatible with PCA6408A with interrupts disabled at power-up
- Pin-to-pin drop-in replacement for PCA6408A
- Output port configuration: bank selectable push-pull or open-drain output stages
- Interrupt status: read-only register identifies the source of an interrupt
- Bit-wise I/O programming features:
  - Output drive strength: four programmable drive strengths to reduce rise and fall times in low-capacitance applications
  - Input latch: Input Port register values changes are kept until the Input Port register is read
  - Pull-up/pull-down enable: floating input or pull-up/pull-down resistor enable
  - Pull-up/pull-down selection: 100 kΩ pull-up/pull-down resistor selection
  - Interrupt mask: mask prevents the generation of the interrupt when input changes state to prevent spurious interrupts

3. Ordering information

Table 1. Ordering information

Type number	Topside marking	Package		
		Name	Description	Version
PCAL6408ABS	L8A	HVQFN16	plastic thermal enhanced very thin quad flat package; no leads; 16 terminals; body 3 × 3 × 0.85 mm	SOT758-1
PCAL6408APW	PL6408A	TSSOP16	plastic thin shrink small outline package; 16 leads; body width 4.4 mm	SOT403-1
PCAL6408AHK	L8	XQFN16	plastic, extremely thin quad flat package; no leads; 16 terminals; body 1.80 × 2.60 × 0.50 mm	SOT1161-1
PCAL6408AEX	L8	XFBGA16[1]	plastic, extremely thin fine-pitch ball grid array package; 16 balls; body 1.6 × 1.6 × 0.5 mm	SOT1354-1
PCAL6408AEX1	18X[2]	X2QFN16	plastic, thermal enhanced super thin land grid array or quad flat package; no leads; 16 terminals; body 1.6 × 1.6 × 0.35 mm	SOT1896-1

[1] XFBGA16 package is discontinued with lifetime buy November 2016; new designs must use X2QFN16 package.

[2] “X” rotates from 1 to 5 and indicates the work week of the indicated month

All information provided in this document is subject to legal disclaimers.

© NXP Semiconductors N.V. 2017. All rights reserved.

3.1 Ordering options

Table 2. Ordering options

Type number	Orderable part number	Package	Packing method	Minimum order quantity	Temperature
PCAL6408ABS	PCAL6408ABSHP	HVQFN16	Reel 13” Q2/T3 *standard mark SMD	6000	T_{amb} = –40 °C to +85 °C
PCAL6408APW	PCAL6408APWJ	TSSOP16	Reel 13” Q1/T1 *standard mark SMD	2500	T_{amb} = –40 °C to +85 °C
PCAL6408AHK	PCAL6408AHKX	XQFN16	Reel 7” Q1/T1 *standard mark SMD	4000	T_{amb} = –40 °C to +85 °C
PCAL6408AEX	PCAL6408AEXX	XFBGA16[1]	Reel 7” Q1/T1 *standard mark SMD	5000	T_{amb} = –40 °C to +85 °C
PCAL6408AEX1	PCAL6408AEX1Z	X2QFN16	Reel 7” Q2/T1 *standard mark SMD	5000	T_{amb} = –40 °C to +85 °C

[1] XFBGA16 package is discontinued with lifetime buy November 2016; new designs must use X2QFN16 package.

4. Block diagram

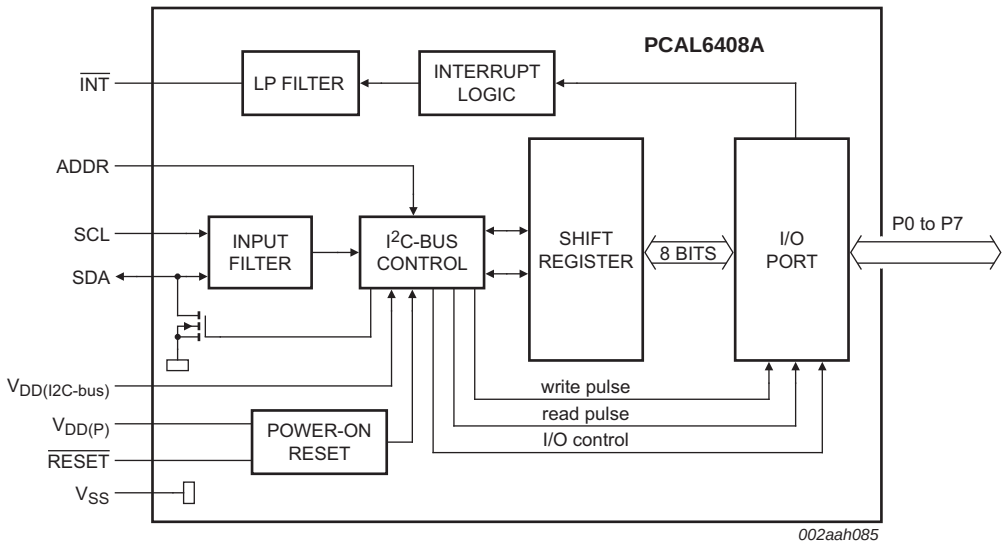

All I/Os are set to inputs at reset.

Fig 1. Block diagram (positive logic)

All information provided in this document is subject to legal disclaimers.

© NXP Semiconductors N.V. 2017. All rights reserved.

5. Pinning information

5.1 Pinning

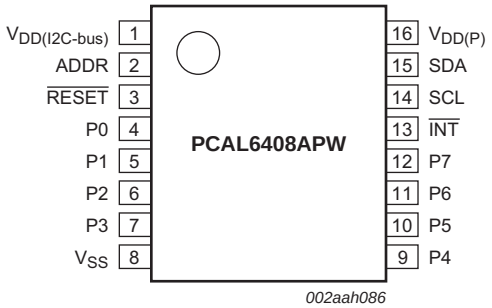

Fig 2. Pin configuration for TSSOP16

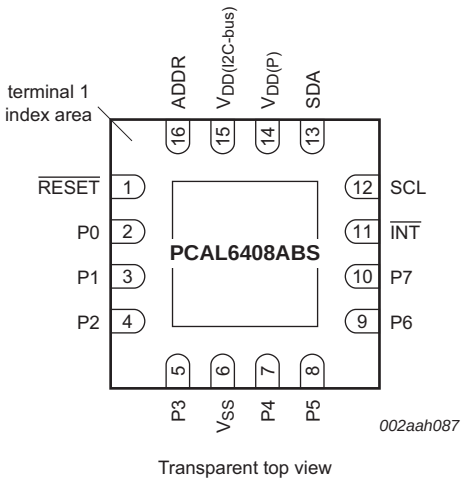

The exposed center pad, if used, must be connected only as a secondary V_{SS} or must be left electrically open.

Fig 3. Pin configuration for HVQFN16

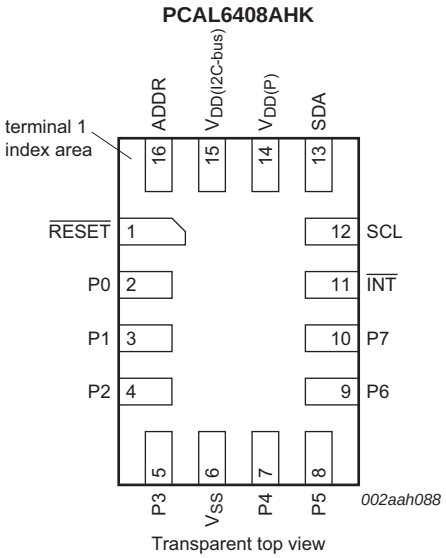

Fig 4. Pin configuration for XQFN16

All information provided in this document is subject to legal disclaimers.

© NXP Semiconductors N.V. 2017. All rights reserved.

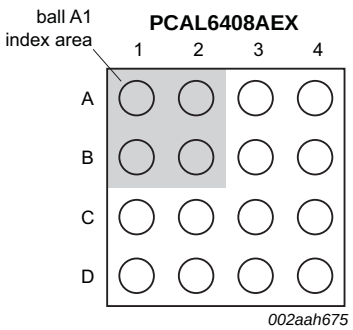

Transparent top view

Fig 5. Pin configuration for 1.6 mm × 1.6 mm XFBGA16

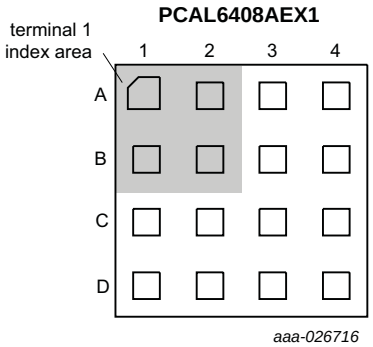

Transparent top view

Fig 6. Pin configuration for 1.6 mm × 1.6 mm X2QFN16 EX1 land grid array

	1	2	3	4
A	RESET	$V_{DD(I2C-bus)}$	$V_{DD(P)}$	SCL
B	P0	ADDR	SDA	$\overline{INT}$
C	P2	P1	P7	P6
D	P3	V_{SS}	P4	P5

002aah676

Transparent top view

Fig 7. Ball mapping for 1.6 mm × 1.6 mm XFBGA16/X2QFN16

5.2 Pin description

Table 3. Pin description

Symbol	Pin				Description
	TSSOP16	HVQFN16	XQFN16	XFBGA16, X2QFN16	
$V_{DD(I2C-bus)}$	1	15	15	A2	Supply voltage of I²C-bus. Connect directly to the V_{DD} of the external I²C master. Provides voltage-level translation.
ADDR	2	16	16	B2	Address input. Connect directly to $V_{DD(P)}$ or ground.
$\overline{RESET}$	3	1	1	A1	Active LOW reset input. Connect to $V_{DD(I2C-bus)}$ through a pull-up resistor if no active connection is used.
P0[1]	4	2	2	B1	Port P input/output 0.
P1[1]	5	3	3	C2	Port P input/output 1.
P2[1]	6	4	4	C1	Port P input/output 2.
P3[1]	7	5	5	D1	Port P input/output 3.
V_{SS}	8	6	6	D2	Ground.
P4[1]	9	7	7	D3	Port P input/output 4.
P5[1]	10	8	8	D4	Port P input/output 5.
P6[1]	11	9	9	C4	Port P input/output 6.

All information provided in this document is subject to legal disclaimers.

© NXP Semiconductors N.V. 2017. All rights reserved.

Table 3. Pin description *…continued*

Symbol	Pin				Description
	TSSOP16	HVQFN16	XQFN16	XFBGA16, X2QFN16	
P7[1]	12	10	10	C3	Port P input/output 7.
$\overline{INT}$	13	11	11	B4	Interrupt output. Connect to $V_{DD(I2C\text{-}bus)}$ through a pull-up resistor.
SCL	14	12	12	A4	Serial clock bus. Connect to $V_{DD(I2C\text{-}bus)}$ through a pull-up resistor.
SDA	15	13	13	B3	Serial data bus. Connect to $V_{DD(I2C\text{-}bus)}$ through a pull-up resistor.
$V_{DD(P)}$	16	14	14	A3	Supply voltage of PCAL6408A for Port P.

[1] All I/O are configured as input at power-on.

All information provided in this document is subject to legal disclaimers.

© NXP Semiconductors N.V. 2017. All rights reserved.

6. Voltage translation

Table 4 shows how to set up V_{DD} levels for the necessary voltage translation between the I²C-bus and the PCAL6408A.

Table 4. Voltage translation

$V_{DD(I2C-bus)}$ (SDA and SCL of I²C master)	$V_{DD(P)}$ (Port P)
1.8 V	1.8 V
1.8 V	2.5 V
1.8 V	3.3 V
1.8 V	5 V
2.5 V	1.8 V
2.5 V	2.5 V
2.5 V	3.3 V
2.5 V	5 V
3.3 V	1.8 V
3.3 V	2.5 V
3.3 V	3.3 V
3.3 V	5 V
5 V	1.8 V
5 V	2.5 V
5 V	3.3 V
5 V	5 V

7. Functional description

Refer to Figure 1 “Block diagram (positive logic)”.

7.1 Device address

The address of the PCAL6408A is shown in Figure 8.

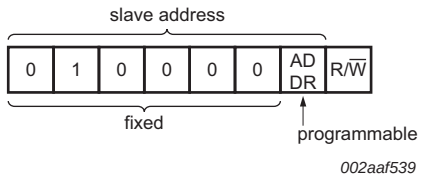

Fig 8. PCAL6408A address

ADDR is the hardware address package pin and is held to either HIGH (logic 1) or LOW (logic 0) to assign one of the two possible slave addresses. The last bit of the slave address defines the operation (read or write) to be performed. A HIGH (logic 1) selects a read operation, while a LOW (logic 0) selects a write operation.

All information provided in this document is subject to legal disclaimers.

© NXP Semiconductors N.V. 2017. All rights reserved.

7.2 Interface definition

Table 5. Interface definition

Byte	Bit							
	7 (MSB)	6	5	4	3	2	1	0 (LSB)
I²C-bus slave address	L	H	L	L	L	L	ADDR	R/$\overline{W}$
I/O data bus	P7	P6	P5	P4	P3	P2	P1	P0

7.3 Pointer register and command byte

Following the successful acknowledgement of the address byte, the bus master sends a command byte, which is stored in the Pointer register in the PCAL6408A. 2 bits of this data byte state the operation (read or write) and the internal registers (Input, Output, Polarity Inversion, or Configuration) that are affected. Bit 6 in conjunction with the lower 3 bits of the Command byte are used to point to the extended features of the device (Agile I/O). This register is ‘write only’.

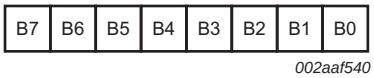

Fig 9. Pointer register bits

Table 6. Command byte

Pointer register bits								Command byte	Register	Protocol	Power-up default
B7	B6	B5	B4	B3	B2	B1	B0				
0	0	0	0	0	0	0	0	00h	Input port	read byte	xxxx xxxx[1]
0	0	0	0	0	0	0	1	01h	Output port	read/write byte	1111 1111
0	0	0	0	0	0	1	0	02h	Polarity Inversion	read/write byte	0000 0000
0	0	0	0	0	0	1	1	03h	Configuration	read/write byte	1111 1111
0	1	0	0	0	0	0	0	40h	Output drive strength 0	read/write byte	1111 1111
0	1	0	0	0	0	0	1	41h	Output drive strength 1	read/write byte	1111 1111
0	1	0	0	0	0	1	0	42h	Input latch	read/write byte	0000 0000
0	1	0	0	0	0	1	1	43h	Pull-up/pull-down enable	read/write byte	0000 0000
0	1	0	0	0	1	0	0	44h	Pull-up/pull-down selection	read/write byte	1111 1111
0	1	0	0	0	1	0	1	45h	Interrupt mask	read/write byte	1111 1111
0	1	0	0	0	1	1	0	46h	Interrupt status	read byte	0000 0000
0	1	0	0	1	1	1	1	4Fh	Output port configuration	read/write byte	0000 0000

[1] Undefined.

All information provided in this document is subject to legal disclaimers.

© NXP Semiconductors N.V. 2017. All rights reserved.

7.4 Register descriptions

7.4.1 Input port register (00h)

The Input port register (register 0) reflects the incoming logic levels of the pins, regardless of whether the pin is defined as an input or an output by the Configuration register. The Input port register is read only; writes to this register have no effect. The default value 'X' is determined by the externally applied logic level. An Input port register read operation is performed as described in Section 8.2 "Read commands".

Table 7. Input port register (address 00h)

Bit	7	6	5	4	3	2	1	0
Symbol	I7	I6	I5	I4	I3	I2	I1	I0
Default	X	X	X	X	X	X	X	X

7.4.2 Output port register (01h)

The Output port register (register 1) shows the outgoing logic levels of the pins defined as outputs by the Configuration register. Bit values in these registers have no effect on pins defined as inputs. In turn, reads from this register reflect the value that was written to this register, **not** the actual pin value.

Table 8. Output port register (address 01h)

Bit	7	6	5	4	3	2	1	0
Symbol	O7	O6	O5	O4	O3	O2	O1	O0
Default	1	1	1	1	1	1	1	1

7.4.3 Polarity inversion register (02h)

The Polarity inversion register (register 2) allows polarity inversion of pins defined as inputs by the Configuration register. If a bit in this register is set (written with '1'), the corresponding port pin's polarity is inverted. If a bit in this register is cleared (written with a '0'), the corresponding port pin's original polarity is retained.

Table 9. Polarity inversion register (address 02h)

Bit	7	6	5	4	3	2	1	0
Symbol	N7	N6	N5	N4	N3	N2	N1	N0
Default	0	0	0	0	0	0	0	0

7.4.4 Configuration register (03h)

The Configuration register (register 3) configures the direction of the I/O pins. If a bit in this register is set to 1, the corresponding port pin is enabled as a high-impedance input. If a bit in this register is cleared to 0, the corresponding port pin is enabled as an output.

Table 10. Configuration register (address 03h)

Bit	7	6	5	4	3	2	1	0
Symbol	C7	C6	C5	C4	C3	C2	C1	C0
Default	1	1	1	1	1	1	1	1

All information provided in this document is subject to legal disclaimers.

© NXP Semiconductors N.V. 2017. All rights reserved.

7.4.5 Output drive strength registers (40h, 41h)

The Output drive strength registers control the output drive level of the GPIO. Each GPIO can be configured independently to a certain output current level by two register control bits. For example, Port 7 is controlled by register 41 CC7 (bits [7:6]), Port 6 is controlled by register 41 CC6 (bits [5:4]). The output drive level of the GPIO is programmed 00b = 0.25×, 01b = 0.5×, 10b = 0.75× or 11b = 1× of the drive capability of the I/O. See Section 9.2 “Output drive strength control” for more details.

Table 11. Current control register (address 40h)

Bit	7	6	5	4	3	2	1	0
Symbol	CC3		CC2		CC1		CC0	
Default	1	1	1	1	1	1	1	1

Table 12. Current control register (address 41h)

Bit	7	6	5	4	3	2	1	0
Symbol	CC7		CC6		CC5		CC4	
Default	1	1	1	1	1	1	1	1

7.4.6 Input latch register (42h)

The Input latch register enables and disables the input latch of the I/O pins. These registers are effective only when the pin is configured as an input port. When an input latch register bit is 0, the corresponding input pin state is not latched. A state change in the corresponding input pin generates an interrupt. A read of the input port register clears the interrupt. If the input goes back to its initial logic state before the input port register is read, then the interrupt is cleared. See Figure 14.

When an input latch register bit is 1, the corresponding input pin state is latched. A change of state of the input generates an interrupt and the input logic value is loaded into the corresponding bit of the input port register (registers 0). A read of the input port register clears the interrupt. If the input pin returns to its initial logic state before the input port register is read, then the interrupt is not cleared and the corresponding bit of the input port register keeps the logic value that initiated the interrupt. See Figure 15. For example, if the P4 input was as logic 0 and the input goes to logic 1 then back to logic 0, the input port register captures this change and an interrupt is generated (if unmasked). When the read is performed on the input port register, the interrupt is cleared, assuming there were no additional input(s) that have changed, and bit 4 of the input port register reads ‘1’. The next read of the input port register bit 4 should now read ‘0’.

An interrupt remains active when a non-latched input simultaneously switches state with a latched input and then returns to its original state. A read of the input port register reflects only the change of state of the latched input and also clears the interrupt. The interrupt is not cleared if the input latch register changes from latched to non-latched configuration.

If the input pin is changed from latched to non-latched input, a read from the input port register reflects the current port logic level. If the input pin is changed from non-latched to latched input, the read from the input port register reflects the latched logic level.

All information provided in this document is subject to legal disclaimers.

© NXP Semiconductors N.V. 2017. All rights reserved.

Table 13. Input latch register (address 42h)

Bit	7	6	5	4	3	2	1	0
Symbol	L7	L6	L5	L4	L3	L2	L1	L0
Default	0	0	0	0	0	0	0	0

7.4.7 Pull-up/pull-down enable register (43h)

This register allows the user to enable or disable pull-up/pull-down resistors on the I/O pins. Setting the bit to logic 1 enables the selection of pull-up/pull-down resistors. Setting the bit to logic 0 disconnects the pull-up/pull-down resistors from the I/O pins. Also, the resistors are disconnected when the outputs are configured as open-drain outputs (see Section 7.4.11). Use the pull-up/pull-down selection registers to select either a pull-up or pull-down resistor.

Table 14. Pull-up/pull-down enable register (address 43h)

Bit	7	6	5	4	3	2	1	0
Symbol	PE7	PE6	PE5	PE4	PE3	PE2	PE1	PE0
Default	0	0	0	0	0	0	0	0

7.4.8 Pull-up/pull-down selection register (44h)

The I/O port can be configured to have pull-up or pull-down resistor by programming the pull-up/pull-down selection register. Setting a bit to logic 1 selects a 100 kΩ pull-up resistor for that I/O pin. Setting a bit to logic 0 selects a 100 kΩ pull-down resistor for that I/O pin. If the pull-up/down feature is disconnected, writing to this register has no effect on I/O pin. Typical value is 100 kΩ with minimum of 50 kΩ and maximum of 150 kΩ.

Table 15. Pull-up/pull-down selection register (address 44h)

Bit	7	6	5	4	3	2	1	0
Symbol	PUD7	PUD6	PUD5	PUD4	PUD3	PUD2	PUD1	PUD0
Default	1	1	1	1	1	1	1	1

7.4.9 Interrupt mask register (45h)

Interrupt mask register is set to logic 1 upon power-on, disabling interrupts during system start-up. Interrupts may be enabled by setting corresponding mask bits to logic 0. If an input changes state and the corresponding bit in the Interrupt mask register is set to 1, the interrupt is masked and the interrupt pin ($\overline{INT}$) is not asserted. If the corresponding bit in the Interrupt mask register is set to 0, the interrupt pin is asserted.

When an input changes state and the resulting interrupt is masked (interrupt mask bit is 1), setting the input mask register bit to 0 causes the interrupt pin to be asserted. If the interrupt mask bit of an input that is currently the source of an interrupt is set to 1, the interrupt pin is de-asserted.

Table 16. Interrupt mask register (address 45h)

Bit	7	6	5	4	3	2	1	0
Symbol	M7	M6	M5	M4	M3	M2	M1	M0
Default	1	1	1	1	1	1	1	1

All information provided in this document is subject to legal disclaimers.

© NXP Semiconductors N.V. 2017. All rights reserved.

7.4.10 Interrupt status register (46h)

This read-only register is used to identify the source of an interrupt. When read, a logic 1 indicates that the corresponding input pin was the source of the interrupt. A logic 0 indicates that the input pin is not the source of an interrupt.

When a corresponding bit in the interrupt mask register is set to 1 (masked), the interrupt status bit returns logic 0.

Table 17. Interrupt status register (address 46h)

Bit	7	6	5	4	3	2	1	0
Symbol	S7	S6	S5	S4	S3	S2	S1	S0
Default	0	0	0	0	0	0	0	0

7.4.11 Output port configuration register (4Fh)

The output port configuration register selects port-wise push-pull or open-drain I/O stage. A logic 0 configures the I/O as push-pull (Q1 and Q2 are active, see Figure 10). A logic 1 configures the I/O as open-drain (Q1 is disabled, Q2 is active) and the recommended command sequence is to program this register (4Fh) before the Configuration register (03h) sets the port pins as outputs.

Table 18. Output port configuration register (address 4Fh)

Bit	7	6	5	4	3	2	1	0
Symbol	reserved							ODEN
Default	0	0	0	0	0	0	0	0

All information provided in this document is subject to legal disclaimers.

© NXP Semiconductors N.V. 2017. All rights reserved.

7.5 I/O port

When an I/O is configured as an input, FETs Q1 and Q2 are off, which creates a high-impedance input. The input voltage may be raised above V_{DD} to a maximum of 5.5 V.

If the I/O is configured as an output, Q1 or Q2 is enabled, depending on the state of the Output port register. In this case, there are low-impedance paths between the I/O pin and either $V_{DD(P)}$ or V_{SS}. The external voltage applied to this I/O pin should not exceed the recommended levels for proper operation.

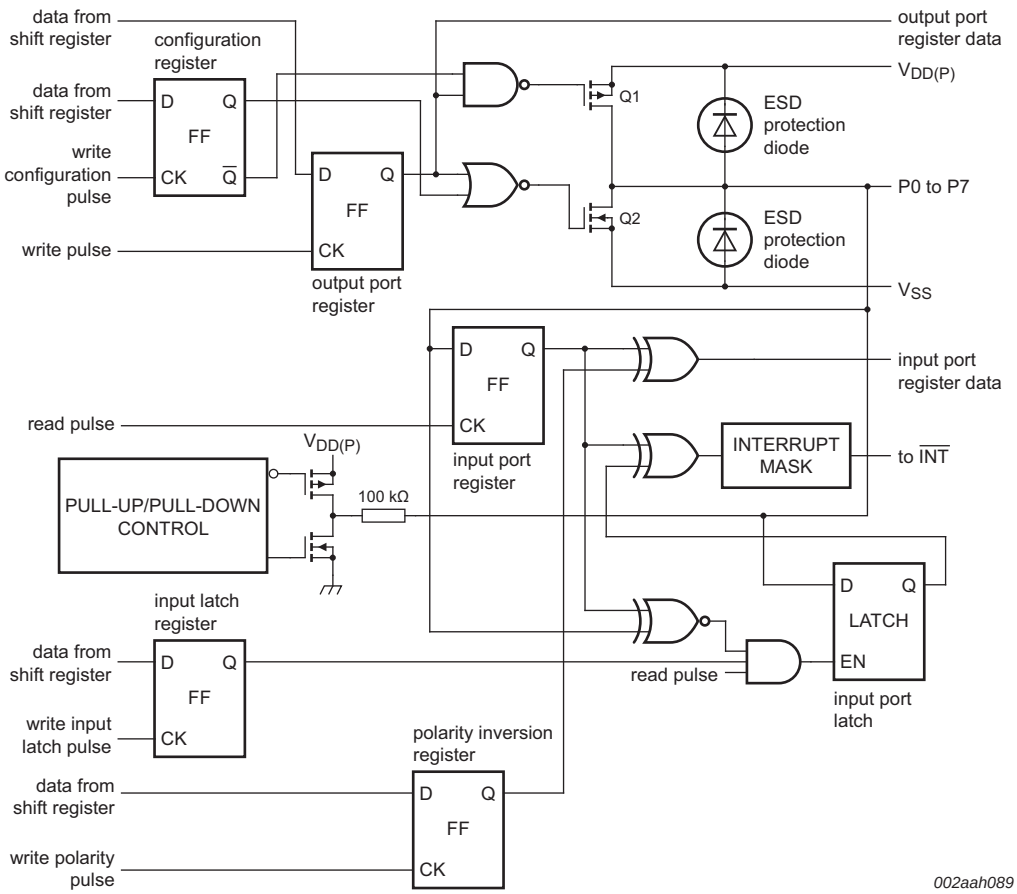

On power-up or reset, all registers return to default values.

Fig 10. Simplified schematic of the I/Os (P0 to P7)

All information provided in this document is subject to legal disclaimers.

© NXP Semiconductors N.V. 2017. All rights reserved.

7.6 Power-on reset

When power (from 0 V) is applied to $V_{DD(P)}$, an internal power-on reset holds the PCAL6408A in a reset condition until $V_{DD(P)}$ has reached V_{POR}. At that time, the reset condition is released and the PCAL6408A registers and I²C-bus/SMBus state machine initialize to their default states. After that, $V_{DD(P)}$ must be lowered to below V_{POR} and back up to the operating voltage for a power-reset cycle. See Section 9.3 "Power-on reset requirements".

7.7 Reset input ($\overline{RESET}$)

The $\overline{RESET}$ input can be asserted to initialize the system while keeping the $V_{DD(P)}$ at its operating level. A reset can be accomplished by holding the $\overline{RESET}$ pin LOW for a minimum of $t_{w(rst)}$. The PCAL6408A registers and I²C-bus/SMBus state machine are changed to their default state once $\overline{RESET}$ is LOW (0). When $\overline{RESET}$ is HIGH (1), the I/O levels at the P port can be changed externally or through the master. This input requires a pull-up resistor to $V_{DD(I2C-bus)}$ if no active connection is used.

7.8 Interrupt output ($\overline{INT}$)

An interrupt is generated by any rising or falling edge of the port inputs in the Input mode. After time $t_{v(INT)}$, the signal $\overline{INT}$ is valid. Resetting the interrupt circuit is achieved when data on the port is changed to the original setting or when data is read from the port that generated the interrupt (see Figure 14). Resetting occurs in the Read mode at the acknowledge (ACK) or not acknowledge (NACK) bit after the rising edge of the SCL signal. Interrupts that occur during the ACK or NACK clock pulse can be lost (or be very short) due to the resetting of the interrupt during this pulse. Each change of the I/Os after resetting is detected and is transmitted as $\overline{INT}$.

A pin configured as an output cannot cause an interrupt. Changing an I/O from an output to an input may cause a false interrupt to occur, if the state of the pin does not match the contents of the Input port register.

The $\overline{INT}$ output has an open-drain structure and requires a pull-up resistor to $V_{DD(P)}$ or $V_{DD(I2C-bus)}$ depending on the application. $\overline{INT}$ should be connected to the voltage source of the device that requires the interrupt information. When using the input latch feature, the input pin state is latched. The interrupt is reset only when data is read from the port that generated the interrupt. The reset occurs in the Read mode at the acknowledge (ACK) or not acknowledge (NACK) bit after the rising edge of the SCL signal.

All information provided in this document is subject to legal disclaimers.

© NXP Semiconductors N.V. 2017. All rights reserved.

8. Bus transactions

The PCAL6408A is an I²C-bus slave device. Data is exchanged between the master and PCAL6408A through write and read commands using I²C-bus. The two communication lines are a serial data line (SDA) and a serial clock line (SCL). Both lines must be connected to a positive supply via a pull-up resistor when connected to the output stages of a device. Data transfer may be initiated only when the bus is not busy.

8.1 Write commands

Data is transmitted to the PCAL6408A by sending the device address and setting the Least Significant Bit (LSB) to a logic 0 (see Figure 8 for device address). The command byte is sent after the address and determines which register receives the data that follows the command byte. There is no limitation on the number of data bytes sent in one write transmission.

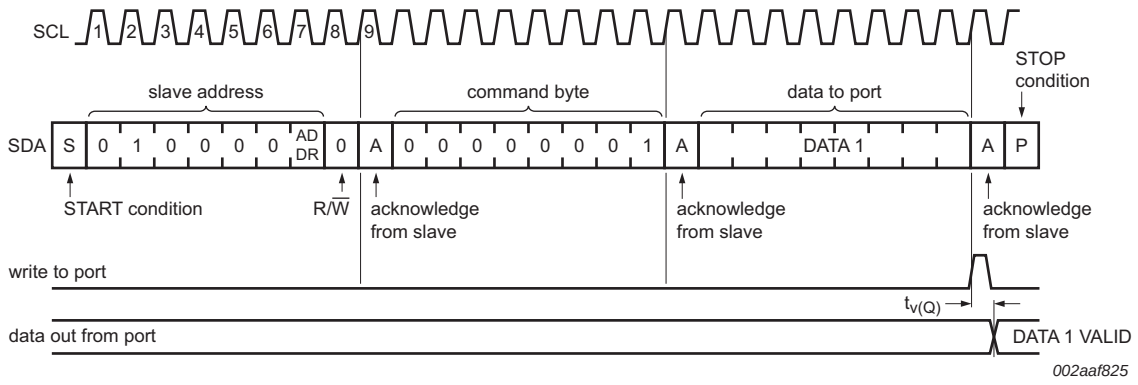

Fig 11. Write to Output port register

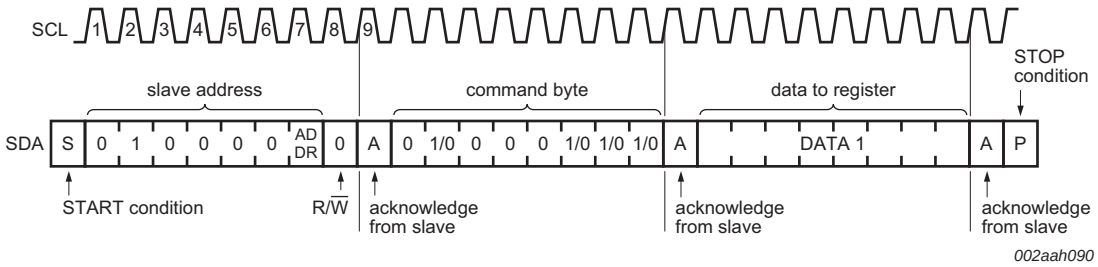

Fig 12. Write to Configuration or Polarity inversion registers

All information provided in this document is subject to legal disclaimers.

© NXP Semiconductors N.V. 2017. All rights reserved.

8.2 Read commands

To read data from the PCAL6408A, the bus master must first send the PCAL6408A address with the least significant bit set to a logic 0 (see Figure 8 for device address). The command byte is sent after the address and determines which register is to be accessed.

After a restart the device address is sent again, but this time the LSB is set to a logic 1. Data from the register defined by the command byte then is sent by the PCAL6408A (see Figure 13 and Figure 14).

Data is clocked into the register on the rising edge of the ACK clock pulse. There is no limit on the number of data bytes received in one read transmission, but on the final byte received the bus master must not acknowledge the data.

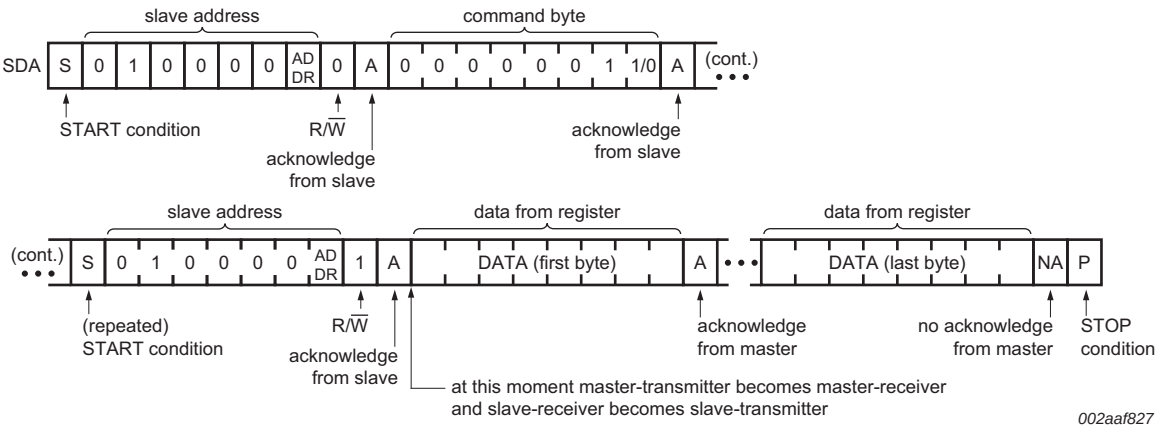

Fig 13. Read from register

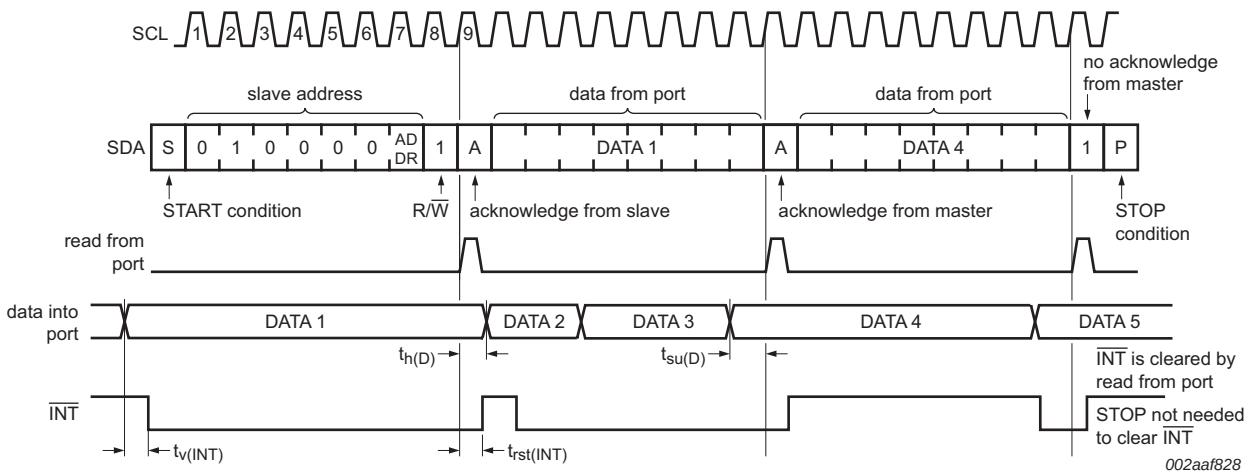

Transfer of data can be stopped at any time by a STOP condition. When this occurs, data present at the latest acknowledge phase is valid (output mode). It is assumed that the command byte has previously been programmed with 00h (read Input port register).

This figure eliminates the command byte transfer, a restart, and slave address call between the initial slave address call and actual data transfer from P port (see Figure 13).

Fig 14. Read Input port register (non-latched)

All information provided in this document is subject to legal disclaimers.

© NXP Semiconductors N.V. 2017. All rights reserved.

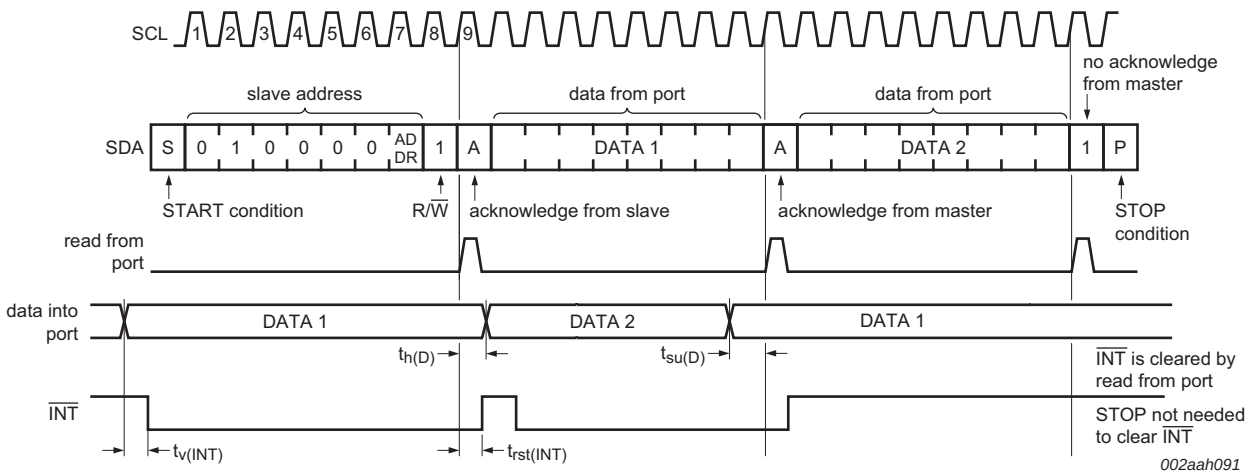

Transfer of data can be stopped at any time by a STOP condition. When this occurs, data present at the latest acknowledge phase is valid (output mode). It is assumed that the command byte has previously been programmed with 00h (read Input port register).

This figure eliminates the command byte transfer, a restart, and slave address call between the initial slave address call and actual data transfer from P port (see Figure 13).

Fig 15. Read Input port register (latch enabled)

All information provided in this document is subject to legal disclaimers.

© NXP Semiconductors N.V. 2017. All rights reserved.

9. Application design-in information

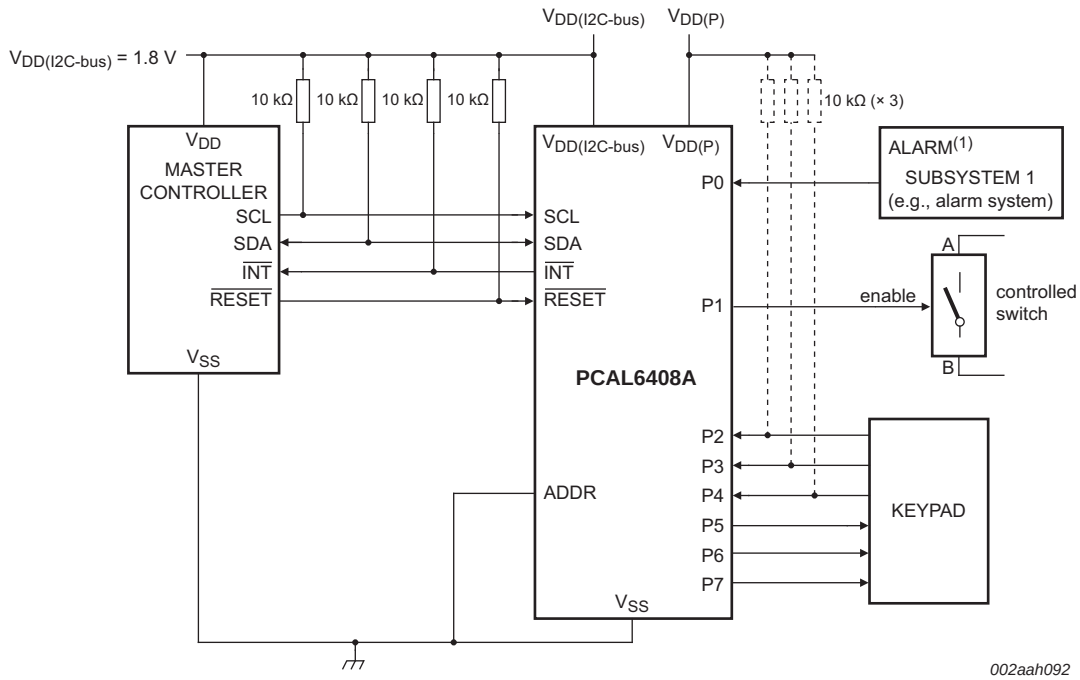

Device address configured as 0100 000x for this example.

P0 and P2 through P4 are configured as inputs.

P1 and P5 through P7 are configured as outputs.

(1) Resistors are required for inputs (on P port) that may float. If a driver to an input will never let the input float, a resistor is not needed. Outputs (in the P port) do not need pull-up resistors.

Fig 16. Typical application

9.1 Minimizing I_{DD} when I/Os control LEDs

When the I/Os are used to control LEDs, normally they are connected to V_{DD} through a resistor as shown in Figure 16. The LED acts as a diode, so when the LED is off, the I/O V_I is about 1.2 V less than V_{DD}. The ΔI_{DD} parameter in Table 23 "Static characteristics" shows how I_{DD} increases as V_I becomes lower than V_{DD}. Designs that must minimize current consumption, such as battery power applications, should consider maintaining the I/O pins greater than or equal to V_{DD} when the LED is off.

Figure 17 shows a high-value resistor in parallel with the LED. Figure 18 shows V_{DD} less than the LED supply voltage by at least 1.2 V. Both of these methods maintain the I/O V_I at or above V_{DD} and prevent additional supply current consumption when the LED is off.

All information provided in this document is subject to legal disclaimers.

© NXP Semiconductors N.V. 2017. All rights reserved.

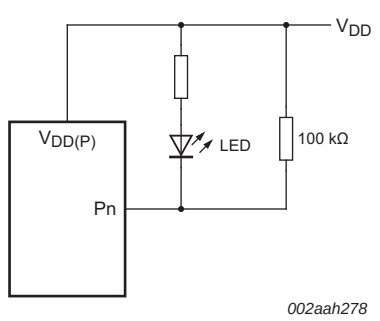

Fig 17. High-value resistor in parallel with the LED

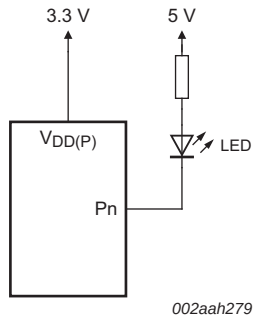

Fig 18. Device supplied by a lower voltage

9.2 Output drive strength control

The Output drive strength registers allow the user to control the output drive level of the GPIO. Each GPIO can be configured independently to one of the four possible output current levels. By programming these bits the user is changing the number of transistor pairs or 'fingers' that drive the I/O pad.

Figure 19 shows a simplified output stage. The behavior of the pad is affected by the Configuration register, the output port data, and the current control register. When the Current Control register bits are programmed to 10b, then only two of the fingers are active, reducing the current drive capability by 50 %.

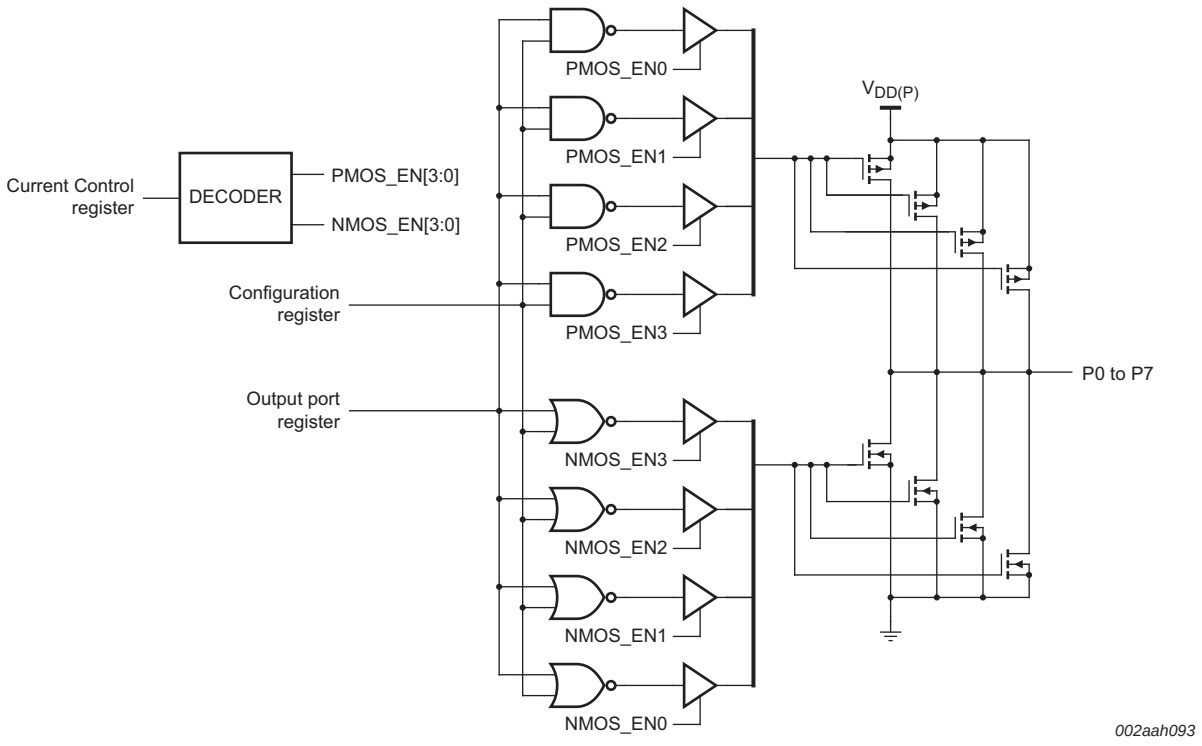

Fig 19. Simplified output stage

All information provided in this document is subject to legal disclaimers.

© NXP Semiconductors N.V. 2017. All rights reserved.

Reducing the current drive capability may be desirable to reduce system noise. When the output switches (transitions from H/L), there is a peak current that is a function of the output drive selection. This peak current runs through V_{DD} and V_{SS} package inductance and creates noise (some radiated, but more critically Simultaneous Switching Noise (SSN)). In other words, switching many outputs at the same time creates ground and supply noise. The output drive strength control through the Output Drive Strength registers allows the user to mitigate SSN issues without the need of additional external components.

9.3 Power-on reset requirements

In the event of a glitch or data corruption, PCAL6408A can be reset to its default conditions by using the power-on reset feature. Power-on reset requires that the device go through a power cycle to be completely reset. This reset also happens when the device is powered on for the first time in an application.

The two types of power-on reset are shown in Figure 20 and Figure 21.

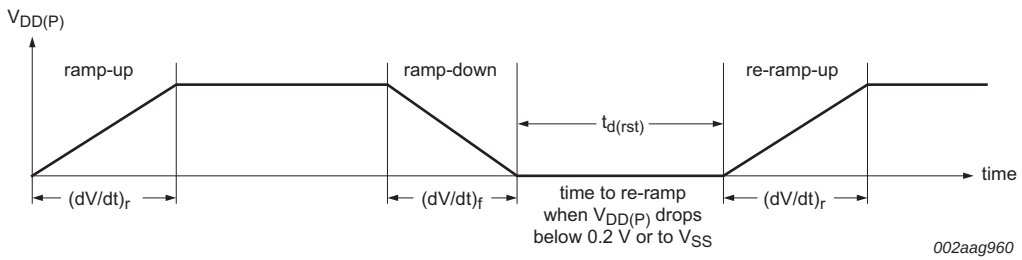

Fig 20. V_{DD} is lowered below 0.2 V or 0 V and then ramped up to V_{DD}

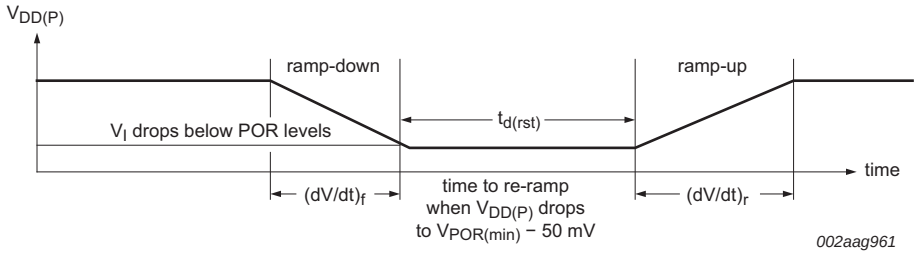

Fig 21. V_{DD} is lowered below the POR threshold, then ramped back up to V_{DD}

Table 19 specifies the performance of the power-on reset feature for PCAL6408A for both types of power-on reset.

All information provided in this document is subject to legal disclaimers.

© NXP Semiconductors N.V. 2017. All rights reserved.

Table 19. Recommended supply sequencing and ramp rates

T_{amb} = 25 °C (unless otherwise noted). Not tested; specified by design.

Symbol	Parameter	Condition		Min	Typ	Max	Unit
$(dV/dt)_f$	fall rate of change of voltage	Figure 20		0.1	-	2000	ms
$(dV/dt)_r$	rise rate of change of voltage	Figure 20		0.1	-	2000	ms
$t_{d(rst)}$	reset delay time	Figure 20; re-ramp time when $V_{DD(P)}$ drops below 0.2 V or to V_{SS}		1	-	-	µs
		Figure 21; re-ramp time when $V_{DD(P)}$ drops to $V_{POR(min)}$ − 50 mV		1	-	-	µs
$\Delta V_{DD(gl)}$	glitch supply voltage difference	Figure 22	[1]	-	-	1.0	V
$t_{w(gl)VDD}$	supply voltage glitch pulse width	Figure 22	[2]	-	-	10	µs
$V_{POR(trip)}$	power-on reset trip voltage	falling $V_{DD(P)}$		0.7	-	-	V
		rising $V_{DD(P)}$		-	-	1.4	V

[1] Level that $V_{DD(P)}$ can glitch down to with a ramp rate of 0.4 µs/V, but not cause a functional disruption when $t_{w(gl)VDD}$ < 1 µs.

[2] Glitch width that will not cause a functional disruption when $\Delta V_{DD(gl)} = 0.5 \times V_{DD(P)}$.

Glitches in the power supply can also affect the power-on reset performance of this device. The glitch width ($t_{w(gl)VDD}$) and glitch height ($\Delta V_{DD(gl)}$) are dependent on each other. The bypass capacitance, source impedance, and device impedance are factors that affect power-on reset performance. Figure 22 and Table 19 provide more information on how to measure these specifications.

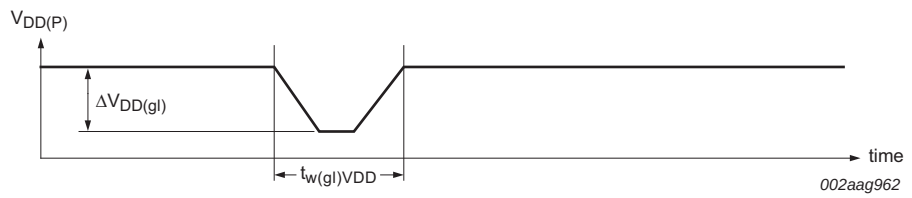

Fig 22. Glitch width and glitch height

V_{POR} is critical to the power-on reset. V_{POR} is the voltage level at which the reset condition is released and all the registers and the I²C-bus/SMBus state machine are initialized to their default states. The value of V_{POR} differs based on the V_{DD} being lowered to or from 0 V. Figure 23 and Table 19 provide more details on this specification.

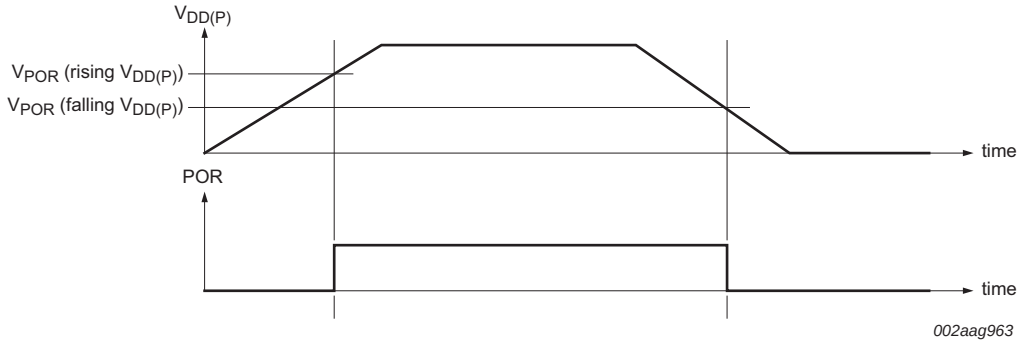

Fig 23. Power-on reset voltage (V_{POR})

All information provided in this document is subject to legal disclaimers.

© NXP Semiconductors N.V. 2017. All rights reserved.

9.4 Device current consumption with internal pull-up and pull-down resistors

The PCAL6408A integrates programmable pull-up and pull-down resistors to eliminate external components when pins are configured as inputs and pull-up or pull-down resistors are required (for example, nothing is driving the inputs to the power supply rails. Since these pull-up and pull-down resistors are internal to the device itself, they contribute to the current consumption of the device and must be considered in the overall system design.

The pull-up or pull-down function is selected in register 44h, while the resistor is connected by the enable register 43h. The configuration of the resistors is shown in Figure 10.

If the resistor is configured as a pull-up, that is, connected to V_{DD}, a current flows from the $V_{DD(P)}$ pin through the resistor to ground when the pin is held LOW. This current appears as additional I_{DD} upsetting any current consumption measurements.

In the same manner, if the resistor is configured as a pull-down and the pin is held HIGH, current flows from the power supply through the pin to the V_{SS} pin. While this current is not measured as part of I_{DD}, one must be mindful of the 200 mA limiting value through V_{SS}.

The pull-up and pull-down resistors are simple resistors and the current is linear with voltage. The resistance specification for these devices spans from 50 kΩ with a nominal 100 kΩ value. Any current flow through these resistors is additive by the number of pins held HIGH or LOW and the current can be calculated by Ohm's law. See Figure 27 for a graph of supply current versus the number of pull-up resistors.

All information provided in this document is subject to legal disclaimers.

© NXP Semiconductors N.V. 2017. All rights reserved.

10. Limiting values

Table 20. Limiting values

In accordance with the Absolute Maximum Rating System (IEC 60134).

Symbol	Parameter	Conditions		Min	Max	Unit
$V_{DD(I2C-bus)}$	I²C-bus supply voltage			–0.5	+6.5	V
$V_{DD(P)}$	supply voltage port P			–0.5	+6.5	V
V_I	input voltage		[1]	–0.5	+6.5	V
V_O	output voltage		[1]	–0.5	+6.5	V
I_{IK}	input clamping current	ADDR, $\overline{RESET}$, SCL; $V_I < 0$ V		-	±20	mA
I_{OK}	output clamping current	$\overline{INT}$; $V_O < 0$ V		-	±20	mA
I_{IOK}	input/output clamping current	P port; $V_O < 0$ V or $V_O > V_{DD(P)}$		-	±20	mA
		SDA; $V_O < 0$ V or $V_O > V_{DD(I2C-bus)}$		-	±20	mA
I_{OL}	LOW-level output current	continuous; P port; $V_O = 0$ V to $V_{DD(P)}$		-	50	mA
		continuous; SDA, $\overline{INT}$; $V_O = 0$ V to $V_{DD(I2C-bus)}$		-	25	mA
I_{OH}	HIGH-level output current	continuous; P port; $V_O = 0$ V to $V_{DD(P)}$		-	25	mA
I_{DD}	supply current	continuous through V_{SS}		-	200	mA
$I_{DD(P)}$	supply current port P	continuous through $V_{DD(P)}$		-	160	mA
$I_{DD(I2C-bus)}$	I²C-bus supply current	continuous through $V_{DD(I2C-bus)}$		-	10	mA
T_{stg}	storage temperature			–65	+150	°C

[1] The input negative-voltage and output voltage ratings may be exceeded if the input and output current ratings are observed.

11. Recommended operating conditions

Table 21. Operating conditions

Symbol	Parameter	Conditions		Min	Max	Unit
$V_{DD(I2C-bus)}$	I²C-bus supply voltage			1.65	5.5	V
$V_{DD(P)}$	supply voltage port P			1.65	5.5	V
V_{IH}	HIGH-level input voltage	SCL, SDA, $\overline{RESET}$		$0.7 \times V_{DD(I2C-bus)}$	5.5	V
		ADDR, P7 to P0		$0.7 \times V_{DD(P)}$	5.5	V
V_{IL}	LOW-level input voltage	SCL, SDA, $\overline{RESET}$		–0.5	$0.3 \times V_{DD(I2C-bus)}$	V
		ADDR, P7 to P0		–0.5	$0.3 \times V_{DD(P)}$	V
I_{OH}	HIGH-level output current	P7 to P0		-	10	mA
I_{OL}	LOW-level output current	P7 to P0		-	25	mA
T_{amb}	ambient temperature	operating in free air		–40	+85	°C

All information provided in this document is subject to legal disclaimers.

© NXP Semiconductors N.V. 2017. All rights reserved.

12. Thermal characteristics

Table 22. Thermal characteristics

Symbol	Parameter	Conditions		Max	Unit
$Z_{th(j-a)}$	transient thermal impedance from junction to ambient	TSSOP16 package	[1]	108	K/W
		HVQFN16 package	[1]	53	K/W
		XQFN16 package	[1]	184	K/W

[1] The package thermal impedance is calculated in accordance with JESD 51-7.

13. Static characteristics

Table 23. Static characteristics

T_{amb} = −40 °C to +85 °C; $V_{DD(I2C-bus)}$ = 1.65 V to 5.5 V; unless otherwise specified.

Symbol	Parameter	Conditions		Min	Typ[1]	Max	Unit
V_{IK}	input clamping voltage	I_I = −18 mA; $V_{DD(P)}$ = 1.65 V to 5.5 V		−1.2	-	-	V
V_{POR}	power-on reset voltage	$V_I = V_{DD(P)}$ or V_{SS}; I_O = 0 mA; $V_{DD(P)}$ = 1.65 V to 5.5 V	[2]	-	1	1.4	V
V_{OH}	HIGH-level output voltage[3]	P port; I_{OH} = −8 mA; CCX = 11b					
		$V_{DD(P)}$ = 1.65 V		1.2	-	-	V
		$V_{DD(P)}$ = 2.3 V		1.8	-	-	V
		$V_{DD(P)}$ = 3 V		2.6	-	-	V
		$V_{DD(P)}$ = 4.5 V		4.1	-	-	V
		P port; I_{OH} = −2.5 mA and CCX = 00b; I_{OH} = −5 mA and CCX = 01b; I_{OH} = −7.5 mA and CCX = 10b; I_{OH} = −10 mA and CCX = 11b;					
		$V_{DD(P)}$ = 1.65 V		1.1	-	-	V
		$V_{DD(P)}$ = 2.3 V		1.7	-	-	V
		$V_{DD(P)}$ = 3 V		2.5	-	-	V
		$V_{DD(P)}$ = 4.5 V		4.0	-	-	V
V_{OL}	LOW-level output voltage[3]	P port; I_{OL} = 8 mA; CCX = 11b					
		$V_{DD(P)}$ = 1.65 V		-	-	0.45	V
		$V_{DD(P)}$ = 2.3 V		-	-	0.25	V
		$V_{DD(P)}$ = 3 V		-	-	0.25	V
		$V_{DD(P)}$ = 4.5 V		-	-	0.2	V
		P port; I_{OL} = 2.5 mA and CCX = 00b; I_{OL} = 5 mA and CCX = 01b; I_{OL} = 7.5 mA and CCX = 10b; I_{OL} = 10 mA and CCX = 11b;					
		$V_{DD(P)}$ = 1.65 V		-	-	0.5	V
		$V_{DD(P)}$ = 2.3 V		-	-	0.3	V
		$V_{DD(P)}$ = 3 V		-	-	0.25	V
		$V_{DD(P)}$ = 4.5 V		-	-	0.2	V

All information provided in this document is subject to legal disclaimers.

© NXP Semiconductors N.V. 2017. All rights reserved.

Table 23. Static characteristics *...continued*

T_{amb} = −40 °C to +85 °C; $V_{DD(I2C-bus)}$ = 1.65 V to 5.5 V; unless otherwise specified.

Symbol	Parameter	Conditions		Min	Typ[1]	Max	Unit
I_{OL}	LOW-level output current	V_{OL} = 0.4 V; $V_{DD(P)}$ = 1.65 V to 5.5 V	[4]				
		SDA		3	-	-	mA
		$\overline{INT}$		3	15[5]	-	mA
I_I	input current	$V_{DD(P)}$ = 1.65 V to 5.5 V					
		SCL, SDA, $\overline{RESET}$; V_I = $V_{DD(I2C-bus)}$ or V_{SS}		-	-	±1	μA
		ADDR; V_I = $V_{DD(P)}$ or V_{SS}		-	-	±1	μA
I_{IH}	HIGH-level input current	P port; V_I = $V_{DD(P)}$; $V_{DD(P)}$ = 1.65 V to 5.5 V		-	-	1	μA
I_{IL}	LOW-level input current	P port; V_I = V_{SS}; $V_{DD(P)}$ = 1.65 V to 5.5 V		-	-	1	μA
I_{DD}	supply current	$I_{DD(I2C-bus)}$ + $I_{DD(P)}$; Operating mode; SDA, P port, ADDR, $\overline{RESET}$; V_I on SDA and $\overline{RESET}$ = $V_{DD(I2C-bus)}$ or V_{SS}; V_I on P port and ADDR = $V_{DD(P)}$ or V_{SS}; I_O = 0 mA; I/O = inputs; f_{SCL} = 400 kHz					
		$V_{DD(P)}$ = 3.6 V to 5.5 V		-	10	25	μA
		$V_{DD(P)}$ = 2.3 V to 3.6 V		-	6.5	15	μA
		$V_{DD(P)}$ = 1.65 V to 2.3 V		-	4	9	μA
		$I_{DD(I2C-bus)}$ + $I_{DD(P)}$; Standby mode; SCL, SDA, P port, ADDR, $\overline{RESET}$; V_I on SCL, SDA and $\overline{RESET}$ = $V_{DD(I2C-bus)}$ or V_{SS}; V_I on P port and ADDR = $V_{DD(P)}$; I_O = 0 mA; I/O = inputs; f_{SCL} = 0 kHz					
		$V_{DD(P)}$ = 3.6 V to 5.5 V		-	1.5	7	μA
		$V_{DD(P)}$ = 2.3 V to 3.6 V		-	1	3.2	μA
		$V_{DD(P)}$ = 1.65 V to 2.3 V		-	0.5	1.7	μA
		Active mode; $I_{DD(I2C-bus)}$ + $I_{DD(P)}$; P port, ADDR, $\overline{RESET}$; V_I on $\overline{RESET}$ = $V_{DD(I2C-bus)}$; V_I on P port and ADDR = $V_{DD(P)}$; I_O = 0 mA; I/O = inputs; f_{SCL} = 400 kHz, continuous register read					
		$V_{DD(P)}$ = 3.6 V to 5.5 V		-	60	125	μA
		$V_{DD(P)}$ = 2.3 V to 3.6 V		-	40	75	μA
		$V_{DD(P)}$ = 1.65 V to 2.3 V		-	20	45	μA
		with pull-ups enabled; $I_{DD(I2C-bus)}$ + $I_{DD(P)}$; P port, ADDR, $\overline{RESET}$; V_I on SCL, SDA and $\overline{RESET}$ = $V_{DD(I2C-bus)}$ or V_{SS}; V_I on P port = V_{SS}; V_I on ADDR = $V_{DD(I2C-bus)}$ or V_{SS}; I_O = 0 mA; I/O = inputs with pull-up enabled; f_{SCL} = 0 kHz					
		$V_{DD(P)}$ = 1.65 V to 5.5 V		-	0.55	0.75	mA

All information provided in this document is subject to legal disclaimers.

© NXP Semiconductors N.V. 2017. All rights reserved.

Table 23. Static characteristics *...continued*

T_{amb} = −40 °C to +85 °C; $V_{DD(I2C-bus)}$ = 1.65 V to 5.5 V; unless otherwise specified.

Symbol	Parameter	Conditions		Min	Typ[1]	Max	Unit
ΔI_{DD}	additional quiescent supply current[6]	SCL, SDA, $\overline{RESET}$; one input at $V_{DD(I2C-bus)}$ − 0.6 V, other inputs at $V_{DD(I2C-bus)}$ or V_{SS}; $V_{DD(P)}$ = 1.65 V to 5.5 V		-	-	25	μA
		P port, ADDR; one input at $V_{DD(P)}$ − 0.6 V, other inputs at $V_{DD(P)}$ or V_{SS}; $V_{DD(P)}$ = 1.65 V to 5.5 V		-	-	80	μA
C_i	input capacitance	SCL; $V_I = V_{DD(I2C-bus)}$ or V_{SS}; $V_{DD(P)}$ = 1.65 V to 5.5 V		-	6	7	pF
C_{io}	input/output capacitance	SDA; $V_{I/O} = V_{DD(I2C-bus)}$ or V_{SS}; $V_{DD(P)}$ = 1.65 V to 5.5 V		-	7	8	pF
		P port; $V_{I/O} = V_{DD(P)}$ or V_{SS}; $V_{DD(P)}$ = 1.65 V to 5.5 V		-	7.5	8.5	pF
$R_{pu(int)}$	internal pull-up resistance	input/output		50	100	150	kΩ
$R_{pd(int)}$	internal pull-down resistance	input/output		50	100	150	kΩ

[1] All typical values are at nominal supply voltage (1.8 V, 2.5 V, 3.3 V or 5 V V_{DD}) and T_{amb} = 25 °C.

[2] When power (from 0 V) is applied to $V_{DD(P)}$, an internal power-on reset holds the PCAL6408A in a reset condition until $V_{DD(P)}$ has reached V_{POR}. At that time, the reset condition is released, and the PCAL6408A registers and I²C-bus/SMBus state machine initialize to their default states. After that, $V_{DD(P)}$ must be lowered to below 0.2 V and back up to the operating voltage for a power-reset cycle.

[3] The total current sourced by all I/Os must be limited to 80 mA.

[4] Each I/O must be externally limited to a maximum of 25 mA, for a device total of 200 mA.

[5] Typical value for T_{amb} = 25 °C. V_{OL} = 0.4 V and V_{DD} = 3.3 V. Typical value for V_{DD} < 2.5 V, V_{OL} = 0.6 V.

[6] Internal pull-up/pull-down resistor disabled.

All information provided in this document is subject to legal disclaimers.

© NXP Semiconductors N.V. 2017. All rights reserved.

13.1 Typical characteristics

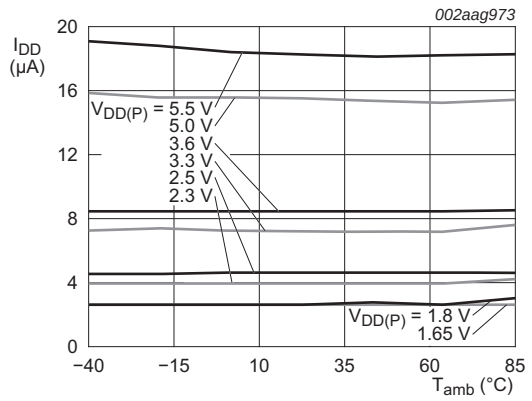

Fig 24. Supply current versus ambient temperature

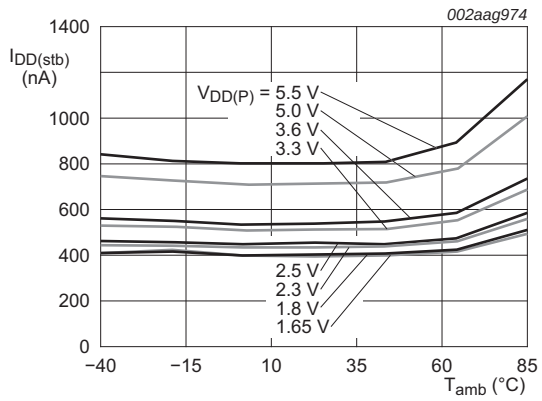

Fig 25. Standby supply current versus ambient temperature

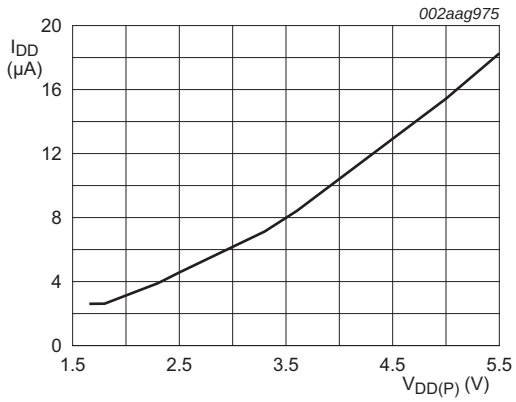

T_{amb} = 25 °C

Fig 26. Supply current versus supply voltage

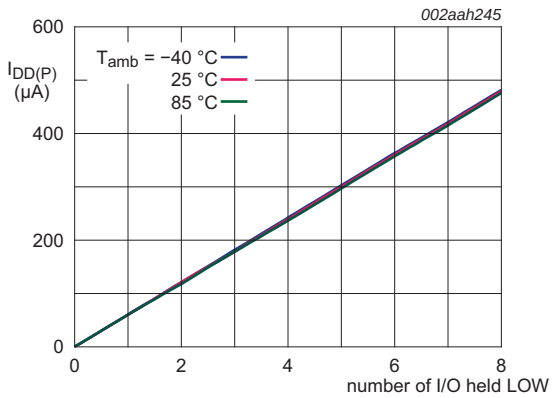

$V_{DD(P)}$ = 5 V

Fig 27. Supply current versus number of I/O held LOW

All information provided in this document is subject to legal disclaimers.

© NXP Semiconductors N.V. 2017. All rights reserved.

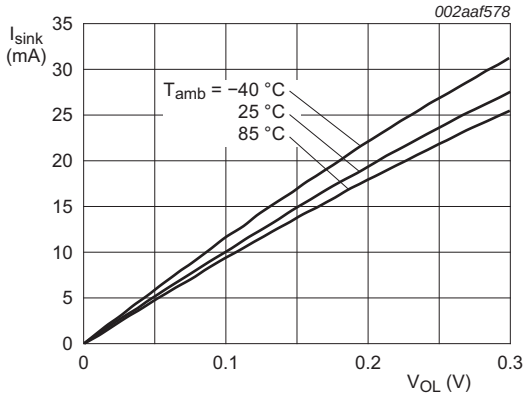

a. $V_{DD(P)}$ = 1.65 V

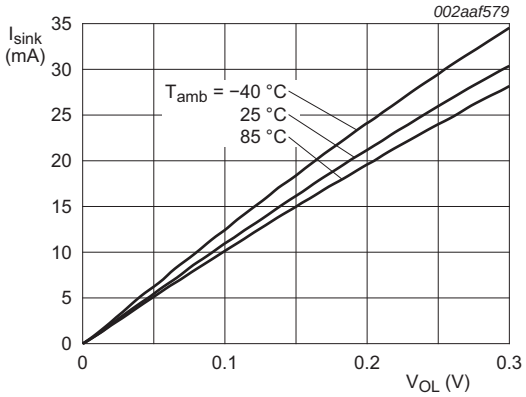

b. $V_{DD(P)}$ = 1.8 V

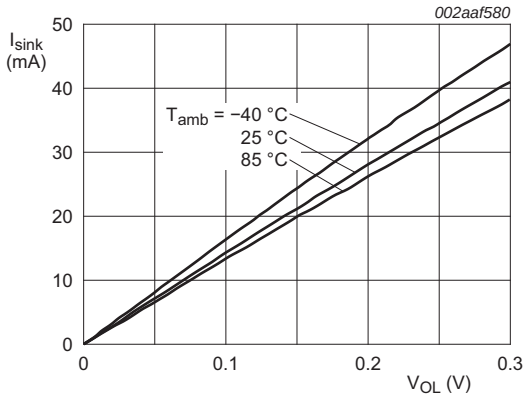

c. $V_{DD(P)}$ = 2.5 V

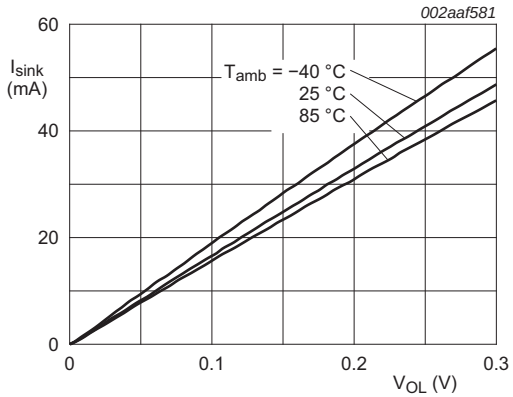

d. $V_{DD(P)}$ = 3.3 V

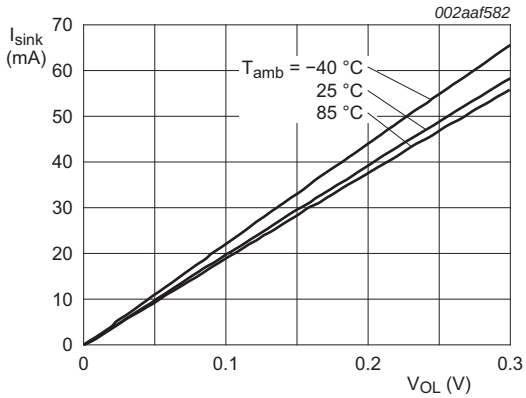

e. $V_{DD(P)}$ = 5.0 V

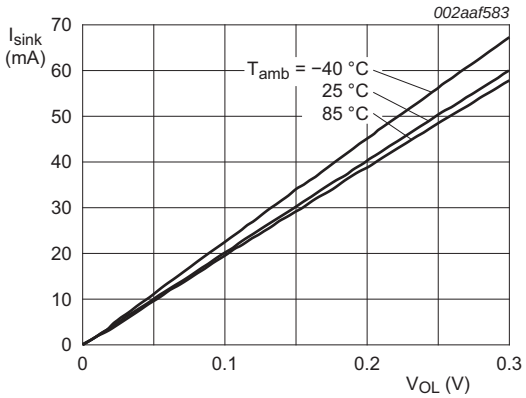

f. $V_{DD(P)}$ = 5.5 V

Fig 28. I/O sink current versus LOW-level output voltage with CCX.X = 11b

All information provided in this document is subject to legal disclaimers.

© NXP Semiconductors N.V. 2017. All rights reserved.

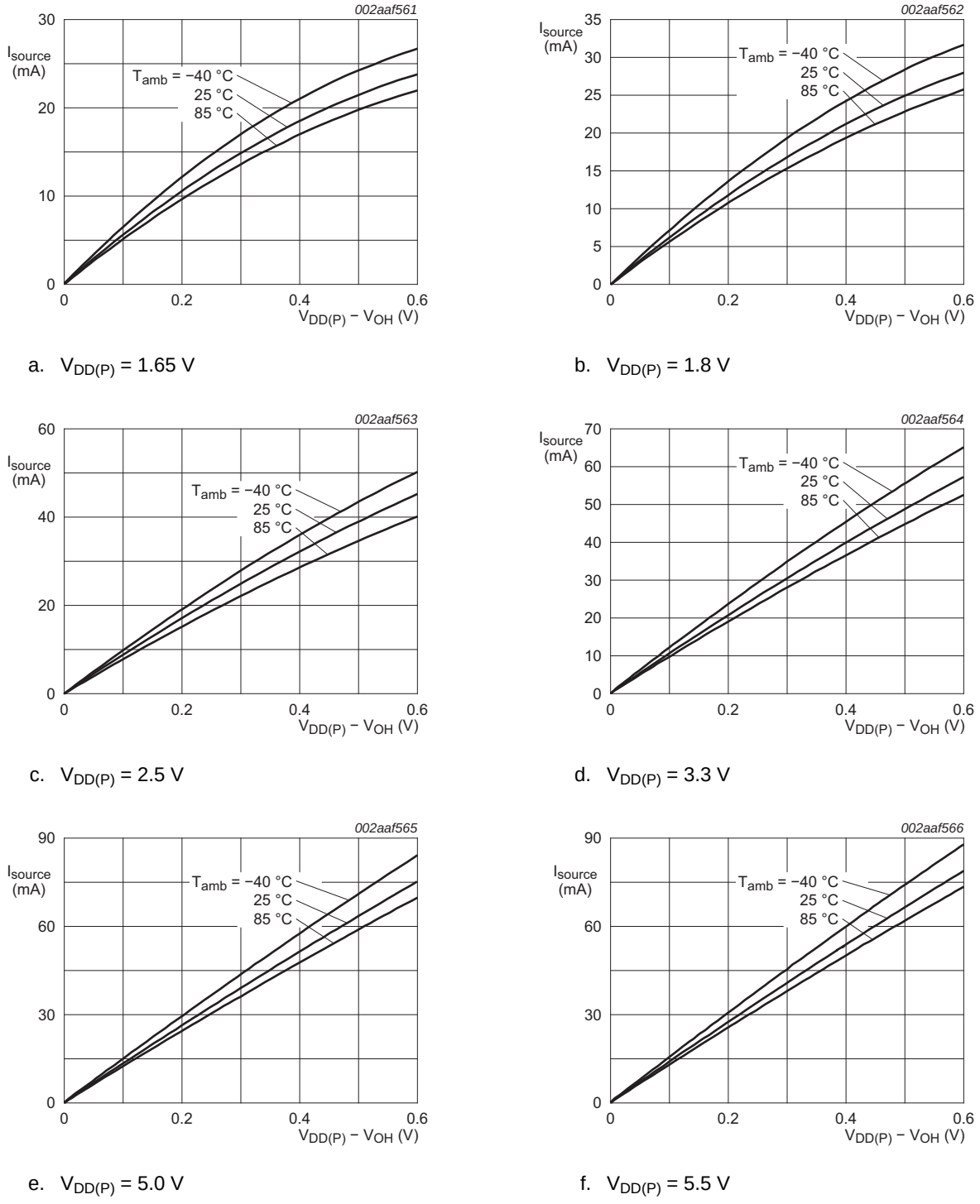

Fig 29. I/O source current versus HIGH-level output voltage with CCX.X = 11b

All information provided in this document is subject to legal disclaimers.

© NXP Semiconductors N.V. 2017. All rights reserved.

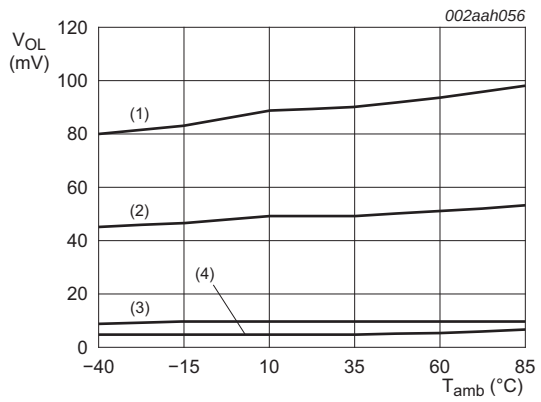

(1) $V_{DD(P)}$ = 1.8 V; I_{sink} = 10 mA

(2) $V_{DD(P)}$ = 5 V; I_{sink} = 10 mA

(3) $V_{DD(P)}$ = 1.8 V; I_{sink} = 1 mA

(4) $V_{DD(P)}$ = 5 V; I_{sink} = 1 mA

Fig 30. LOW-level output voltage versus temperature

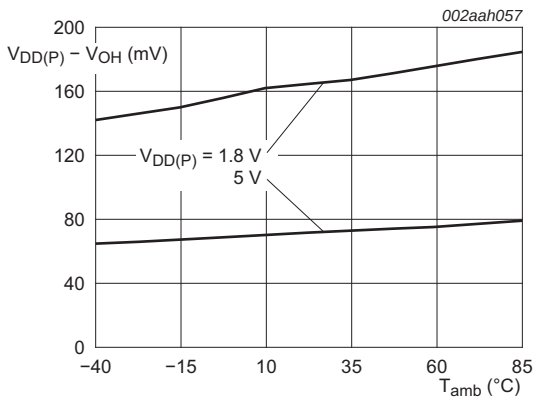

I_{source} = −10 mA

Fig 31. I/O high voltage versus temperature

All information provided in this document is subject to legal disclaimers.

© NXP Semiconductors N.V. 2017. All rights reserved.

14. Dynamic characteristics

Table 24. I²C-bus interface timing requirements

Over recommended operating free air temperature range, unless otherwise specified. See Figure 32.

Symbol	Parameter	Conditions		Standard-mode I²C-bus		Fast-mode I²C-bus		Unit
				Min	Max	Min	Max	
f_{SCL}	SCL clock frequency			0	100	0	400	kHz
t_{HIGH}	HIGH period of the SCL clock			4	-	0.6	-	µs
t_{LOW}	LOW period of the SCL clock			4.7	-	1.3	-	µs
t_{SP}	pulse width of spikes that must be suppressed by the input filter			0	50	0	50	ns
$t_{SU;DAT}$	data set-up time			250	-	100	-	ns
$t_{HD;DAT}$	data hold time			0	-	0	-	ns
t_r	rise time of both SDA and SCL signals			-	1000	20	300	ns
t_f	fall time of both SDA and SCL signals			-	300	$20 \times (V_{DD} / 5.5\ V)$	300	ns
t_{BUF}	bus free time between a STOP and START condition			4.7	-	1.3	-	µs
$t_{SU;STA}$	set-up time for a repeated START condition			4.7	-	0.6	-	µs
$t_{HD;STA}$	hold time (repeated) START condition			4	-	0.6	-	µs
$t_{SU;STO}$	set-up time for STOP condition			4	-	0.6	-	µs
$t_{VD;DAT}$	data valid time	SCL LOW to SDA output valid		-	3.45	-	0.9	µs
$t_{VD;ACK}$	data valid acknowledge time	ACK signal from SCL LOW to SDA (out) LOW		-	3.45	-	0.9	µs

Table 25. Reset timing requirements

Over recommended operating free air temperature range, unless otherwise specified. See Figure 35.

Symbol	Parameter	Conditions		Standard-mode I²C-bus		Fast-mode I²C-bus		Unit
				Min	Max	Min	Max	
$t_{w(rst)}$	reset pulse width			30	-	30	-	ns
$t_{rec(rst)}$	reset recovery time			200	-	200	-	ns
t_{rst}	reset time			600	-	600	-	ns

All information provided in this document is subject to legal disclaimers.

© NXP Semiconductors N.V. 2017. All rights reserved.

Table 26. Switching characteristics

Over recommended operating free air temperature range; $C_L \leq 100$ pF; unless otherwise specified. See Figure 34.

Symbol	Parameter	Conditions		Standard-mode I²C-bus		Fast-mode I²C-bus		Unit
				Min	Max	Min	Max	
$t_{v(INT)}$	valid time on pin $\overline{INT}$	from P port to $\overline{INT}$		-	1	-	1	µs
$t_{rst(INT)}$	reset time on pin $\overline{INT}$	from SCL to $\overline{INT}$		-	1	-	1	µs
$t_{v(Q)}$	data output valid time	from SCL to P port		-	400	-	400	ns
$t_{su(D)}$	data input set-up time	from P port to SCL		0	-	0	-	ns
$t_{h(D)}$	data input hold time	from P port to SCL		300	-	300	-	ns

15. Parameter measurement information

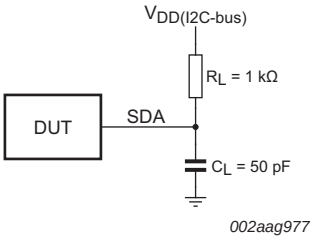

a. SDA load configuration

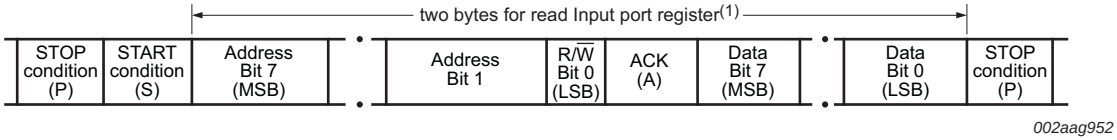

b. Transaction format

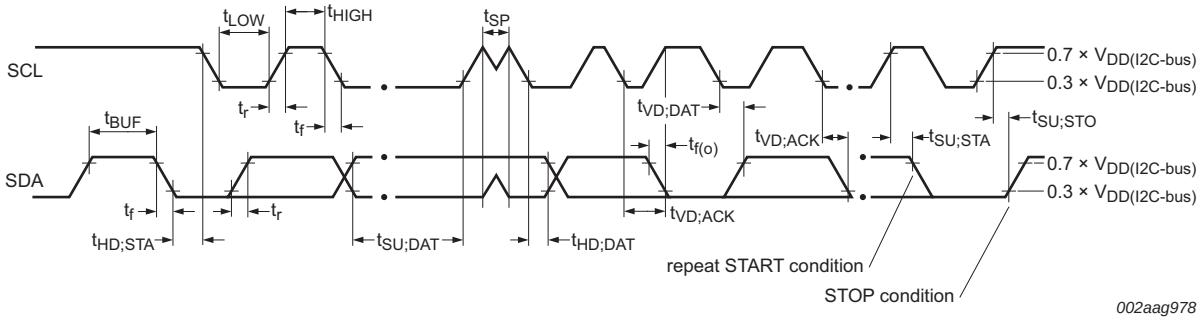

c. Voltage waveforms

C_L includes probe and jig capacitance.

All inputs are supplied by generators having the following characteristics: PRR ≤ 10 MHz; Z_o = 50 Ω; $t_r/t_f \leq 30$ ns.

All parameters and waveforms are not applicable to all devices.

Byte 1 = I²C-bus address; Byte 2, byte 3 = P port data.

(1) See Figure 14.

Fig 32. I²C-bus interface load circuit and voltage waveforms

All information provided in this document is subject to legal disclaimers.

© NXP Semiconductors N.V. 2017. All rights reserved.

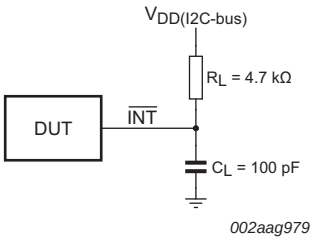

a. Interrupt load configuration

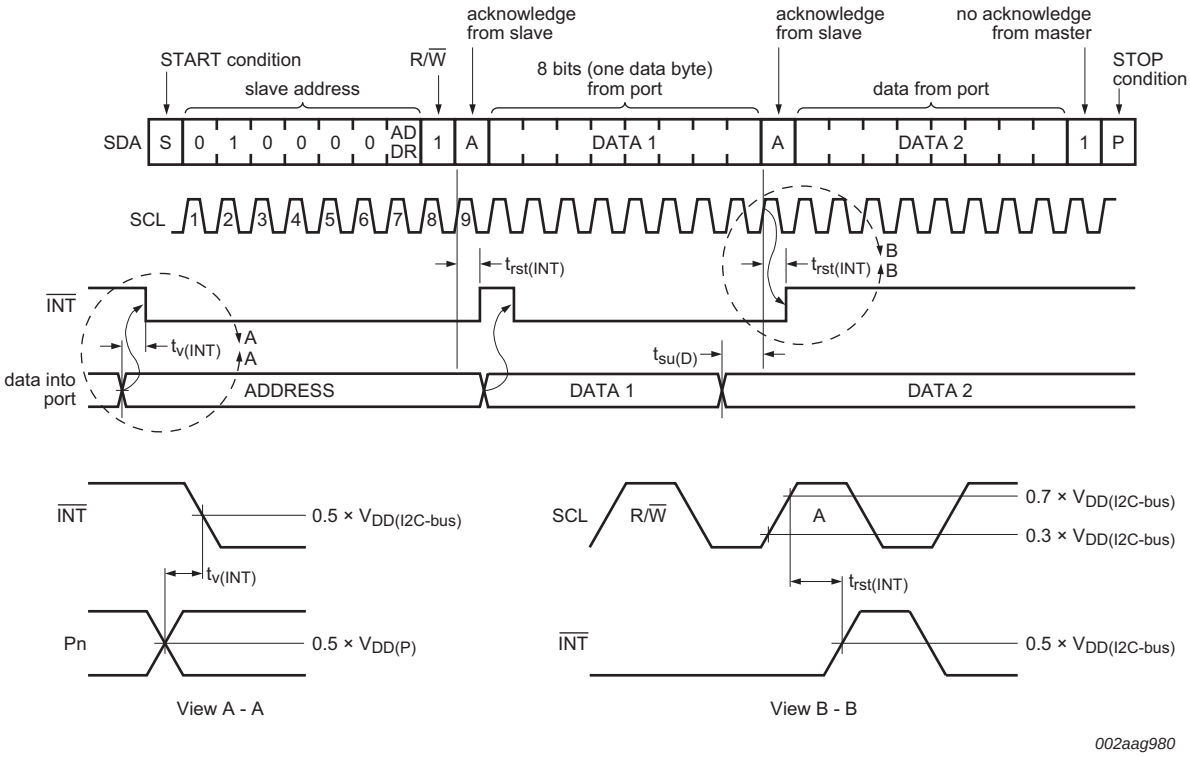

b. Voltage waveforms

C_L includes probe and jig capacitance.

All inputs are supplied by generators having the following characteristics: PRR ≤ 10 MHz; Z_o = 50 Ω; t_r/t_f ≤ 30 ns.

All parameters and waveforms are not applicable to all devices.

Fig 33. Interrupt load circuit and voltage waveforms

All information provided in this document is subject to legal disclaimers.

© NXP Semiconductors N.V. 2017. All rights reserved.

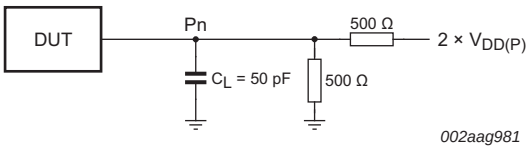

a. P port load configuration

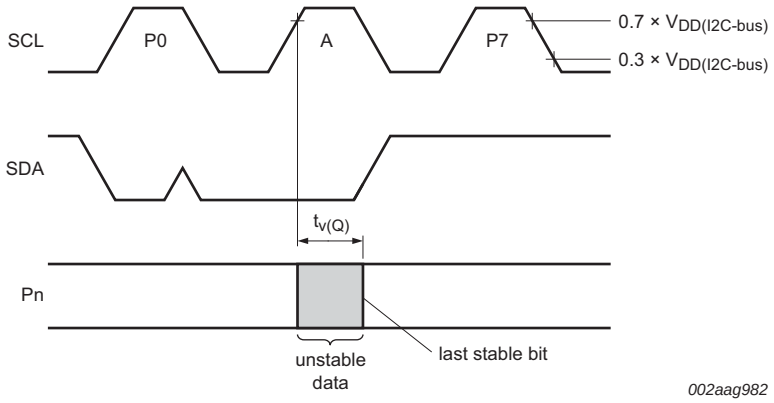

b. Write mode (R/$\overline{W}$ = 0)

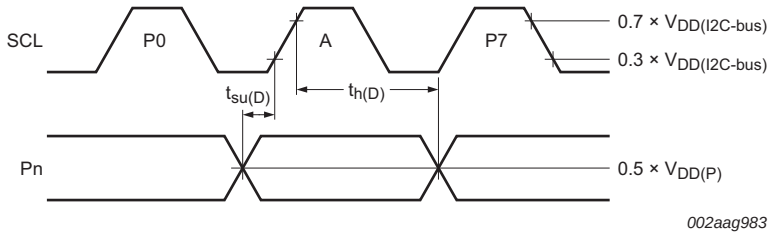

c. Read mode (R/$\overline{W}$ = 1)

C_L includes probe and jig capacitance.

$t_{v(Q)}$ is measured from 0.7 × $V_{DD(I2C\text{-}bus)}$ on SCL to 50 % I/O (Pn) output.

All inputs are supplied by generators having the following characteristics: PRR ≤ 10 MHz; Z_o = 50 Ω; t_r/t_f ≤ 30 ns.

The outputs are measured one at a time, with one transition per measurement.

All parameters and waveforms are not applicable to all devices.

Fig 34. P port load circuit and voltage waveforms

All information provided in this document is subject to legal disclaimers.

© NXP Semiconductors N.V. 2017. All rights reserved.

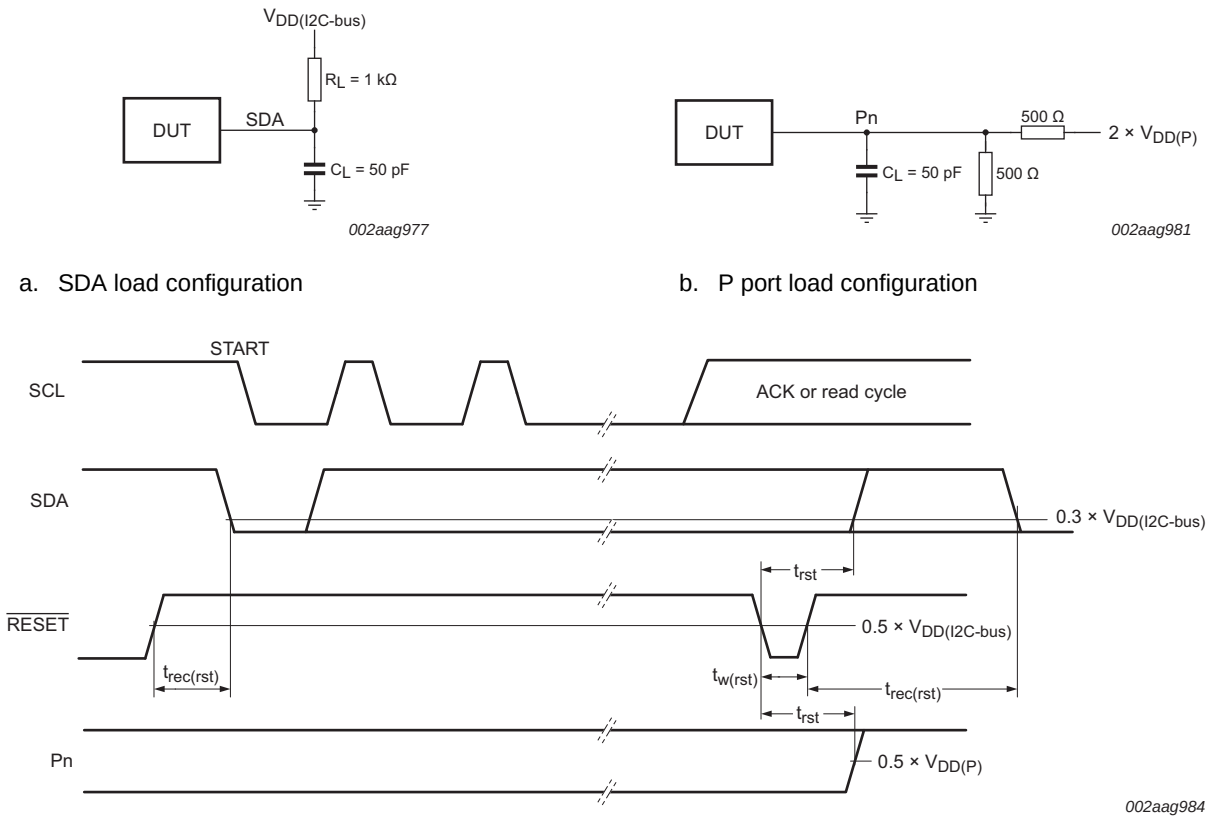

c. $\overline{\text{RESET}}$ timing

C_L includes probe and jig capacitance.

All inputs are supplied by generators having the following characteristics: PRR ≤ 10 MHz; Z_o = 50 Ω; t_r/t_f ≤ 30 ns.

The outputs are measured one at a time, with one transition per measurement.

I/Os are configured as inputs.

All parameters and waveforms are not applicable to all devices.

Fig 35. Reset load circuits and voltage waveforms

All information provided in this document is subject to legal disclaimers.

© NXP Semiconductors N.V. 2017. All rights reserved.

16. Package outline

TSSOP16: plastic thin shrink small outline package; 16 leads; body width 4.4 mm **SOT403-1**

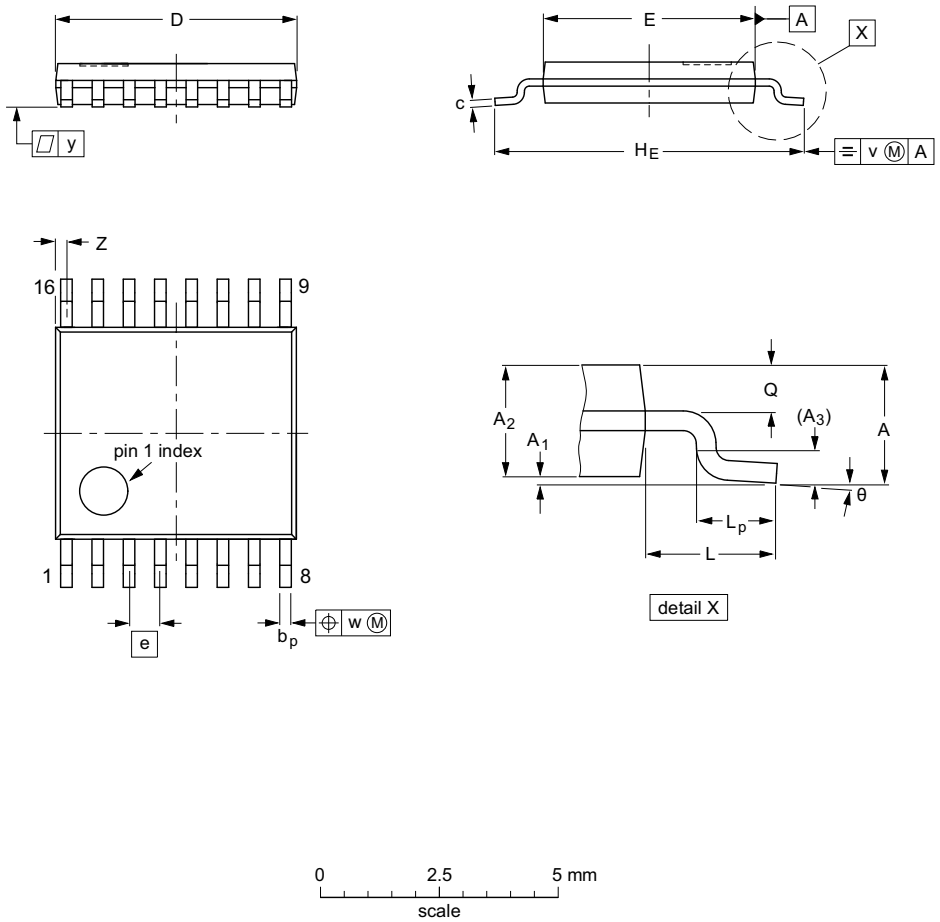

DIMENSIONS (mm are the original dimensions)

UNIT	A max.	A_1	A_2	A_3	b_p	c	D (1)	E (2)	e	H_E	L	L_p	Q	v	w	y	Z (1)	θ
mm	1.1	0.15 0.05	0.95 0.80	0.25	0.30 0.19	0.2 0.1	5.1 4.9	4.5 4.3	0.65	6.6 6.2	1	0.75 0.50	0.4 0.3	0.2	0.13	0.1	0.40 0.06	8° 0°

Notes

1. Plastic or metal protrusions of 0.15 mm maximum per side are not included.
2. Plastic interlead protrusions of 0.25 mm maximum per side are not included.

OUTLINE VERSION	REFERENCES				EUROPEAN PROJECTION	ISSUE DATE
	IEC	JEDEC	JEITA			
SOT403-1		MO-153				~~99-12-27~~ 03-02-18

Fig 36. Package outline SOT403-1 (TSSOP16)

All information provided in this document is subject to legal disclaimers.

© NXP Semiconductors N.V. 2017. All rights reserved.

HVQFN16: plastic thermal enhanced very thin quad flat package; no leads; 16 terminals; body 3 x 3 x 0.85 mm **SOT758-1**

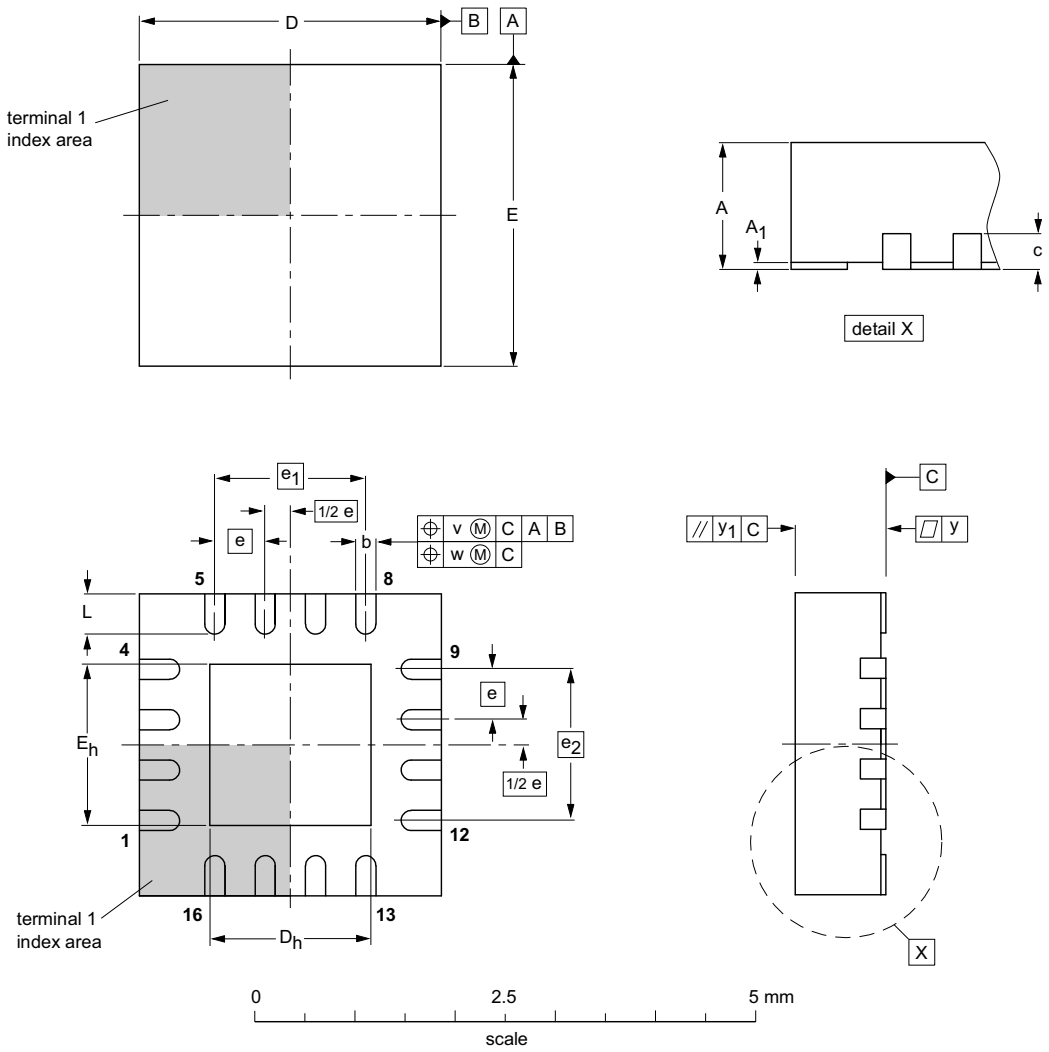

DIMENSIONS (mm are the original dimensions)

UNIT	A(1) max.	A_1	b	c	D(1)	D_h	E(1)	E_h	e	e_1	e_2	L	v	w	y	y_1
mm	1	0.05 0.00	0.30 0.18	0.2	3.1 2.9	1.75 1.45	3.1 2.9	1.75 1.45	0.5	1.5	1.5	0.5 0.3	0.1	0.05	0.05	0.1

Note

1. Plastic or metal protrusions of 0.075 mm maximum per side are not included.

OUTLINE VERSION	REFERENCES				EUROPEAN PROJECTION	ISSUE DATE
	IEC	JEDEC	JEITA			
SOT758-1	- - -	MO-220	- - -			~~02-03-25~~ 02-10-21

Fig 37. Package outline SOT758-1 (HVQFN16)

All information provided in this document is subject to legal disclaimers.

© NXP Semiconductors N.V. 2017. All rights reserved.

XQFN16: plastic, extremely thin quad flat package; no leads; 16 terminals; body 1.80 x 2.60 x 0.50 mm **SOT1161-1**

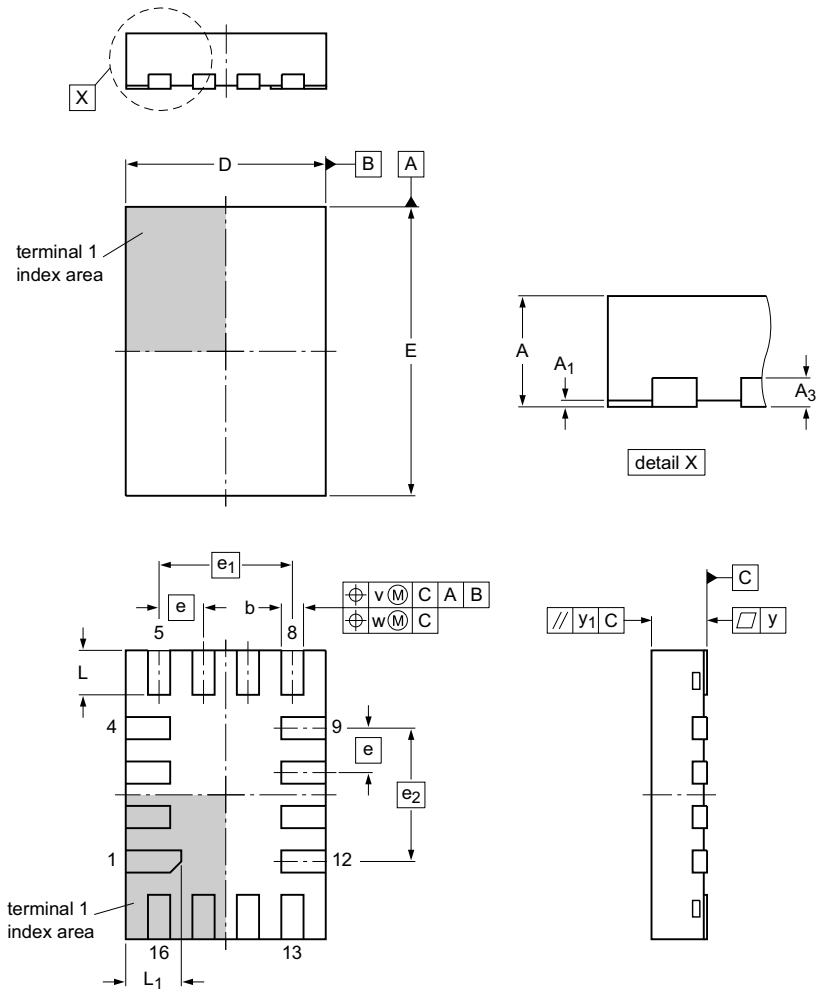

Dimensions

Unit(1)		A	A_1	A_3	b	D	E	e	e_1	e_2	L	L_1	v	w	y	y_1
mm	max	0.5	0.05		0.25	1.9	2.7				0.45	0.55				
	nom			0.127	0.20	1.8	2.6	0.4	1.2	1.2	0.40	0.50	0.1	0.05	0.05	0.05
	min		0.00		0.15	1.7	2.5				0.35	0.45				

Note
1. Plastic or metal protrusions of 0.075 mm maximum per side are not included.

sot1161-1_po

Outline version	References				European projection	Issue date
	IEC	JEDEC	JEITA			
SOT1161-1	- - -	- - -	- - -			~~09-12-28~~ 09-12-29

Fig 38. Package outline SOT1161-1 (XQFN16)

All information provided in this document is subject to legal disclaimers.

© NXP Semiconductors N.V. 2017. All rights reserved.

XFBGA16: plastic, extremely thin fine-pitch ball grid array package; 16 balls **SOT1354-1**

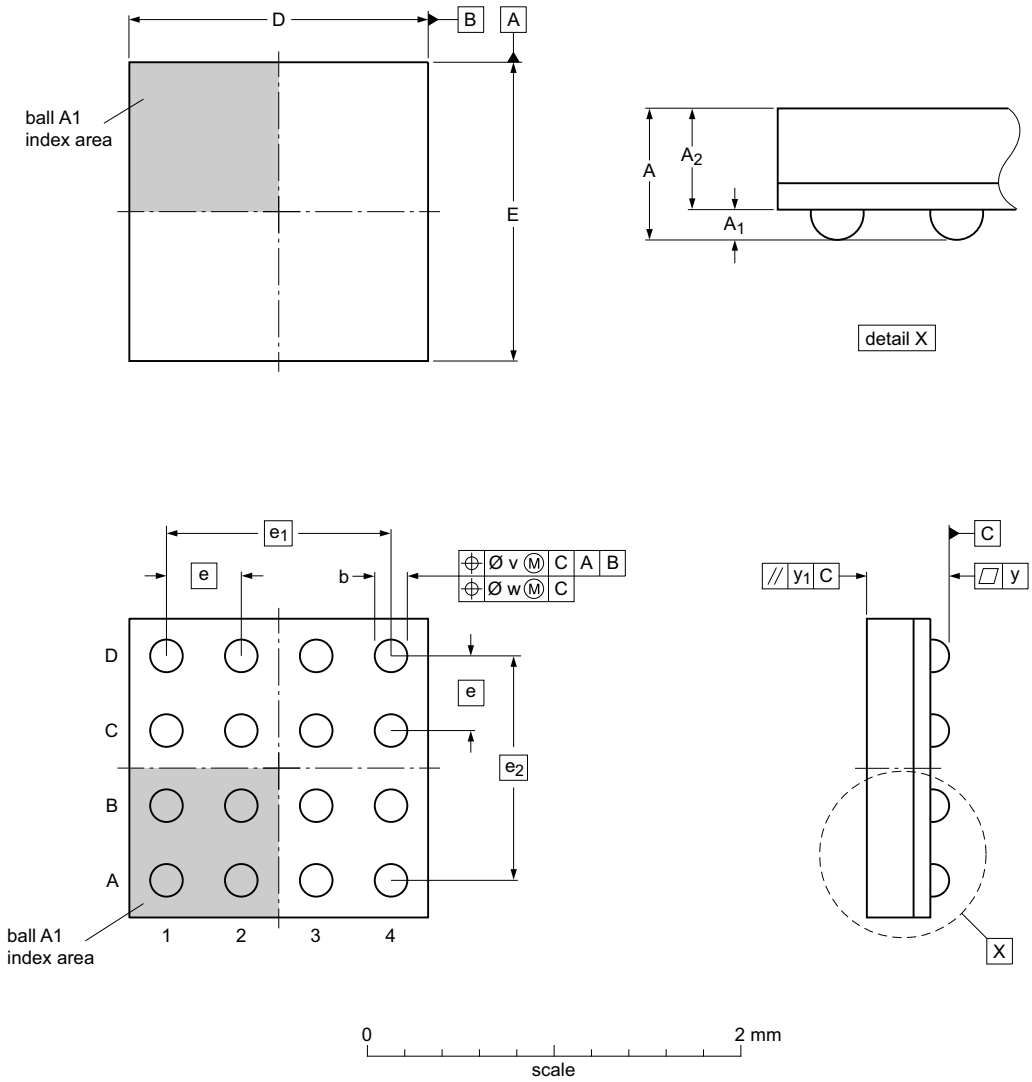

Dimensions (mm are the original dimensions)

Unit		A	A_1	A_2	b	D	E	e	e_1	e_2	v	w	y	y_1
mm	max	0.5	0.15	0.35	0.205	1.7	1.7							
	nom		0.10	0.34	0.175	1.6	1.6	0.4	1.2	1.2	0.15	0.05	0.08	0.1
	min		0.05	0.33	0.145	1.5	1.5							

sot1354-1_po

Outline version	References				European projection	Issue date
	IEC	JEDEC	JEITA			
SOT1354-1	- - -	- - -	- - -			~~13-03-26~~ 13-08-27

Fig 39. Package outline SOT1354-1 (XFBGA16)

All information provided in this document is subject to legal disclaimers.

© NXP Semiconductors N.V. 2017. All rights reserved.

X2QFN16: plastic, thermal enhanced super thin quad flat package; no leads; 16 terminals; 1.6 x 1.6 x 0.35 mm body **SOT1896-1**

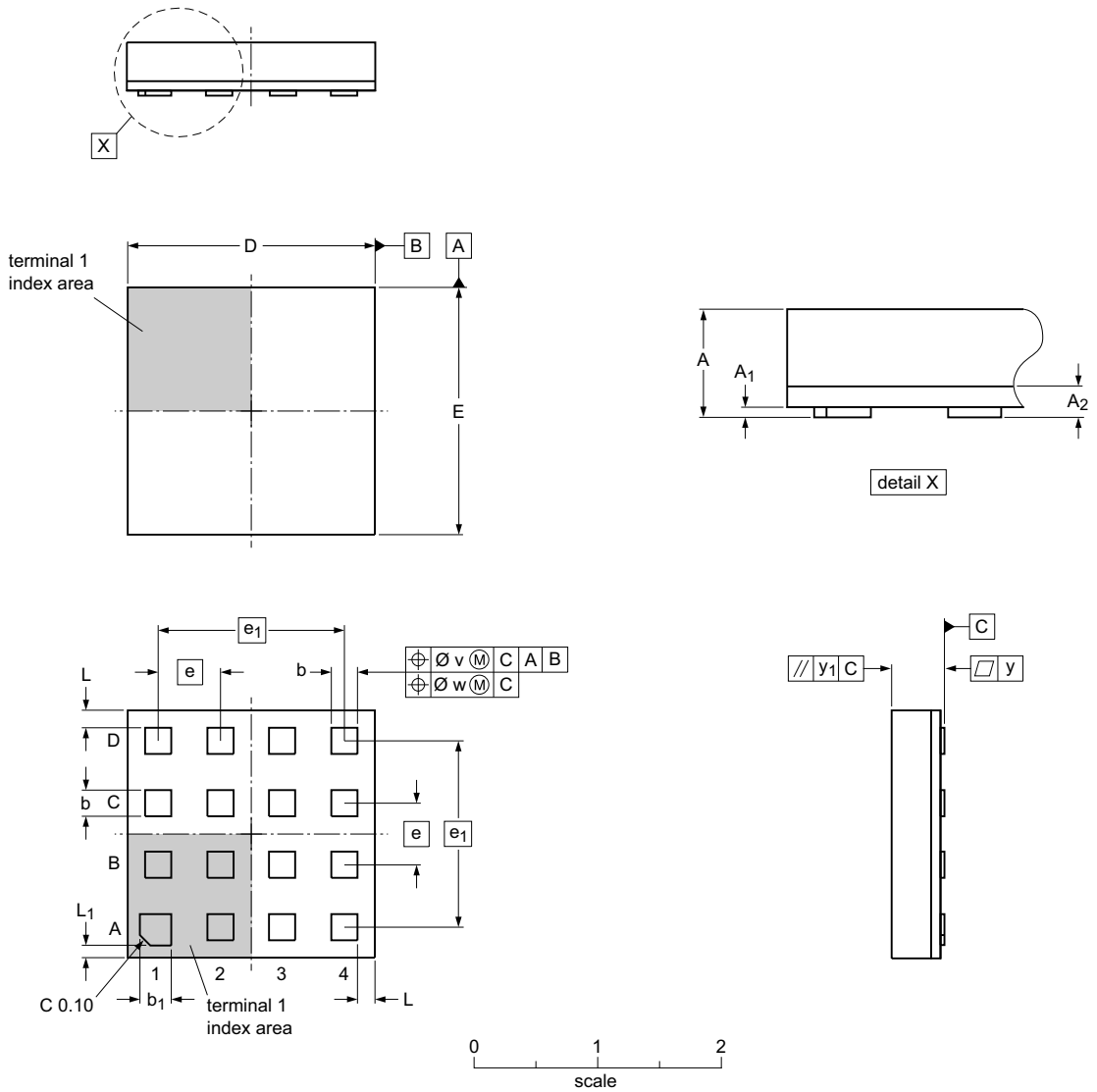

Dimensions (mm are the original dimensions)

Unit		A	A_1	A_2	b	b_1	D	E	e	e_1	L	L_1	v	w	y
mm	max	0.40	0.05		0.22	0.27	1.70	1.70							
	nom	0.35		0.10	0.17	0.22	1.60	1.60	0.40	1.2	0.12	0.065	0.15	0.05	0.10
	min	0.30	0.00		0.12	0.17	1.50	1.50							

sot1896-1_po

Outline version	References				European projection	Issue date
	IEC	JEDEC	JEITA			
SOT1896-1	- - -	- - -	- - -			~~16-08-17~~ 16-08-19

Fig 40. Package outline SOT1896-1 (X2QFN16)

All information provided in this document is subject to legal disclaimers.

© NXP Semiconductors N.V. 2017. All rights reserved.

17. Soldering of SMD packages

This text provides a very brief insight into a complex technology. A more in-depth account of soldering ICs can be found in Application Note *AN10365 "Surface mount reflow soldering description"*.

17.1 Introduction to soldering

Soldering is one of the most common methods through which packages are attached to Printed Circuit Boards (PCBs), to form electrical circuits. The soldered joint provides both the mechanical and the electrical connection. There is no single soldering method that is ideal for all IC packages. Wave soldering is often preferred when through-hole and Surface Mount Devices (SMDs) are mixed on one printed wiring board; however, it is not suitable for fine pitch SMDs. Reflow soldering is ideal for the small pitches and high densities that come with increased miniaturization.

17.2 Wave and reflow soldering

Wave soldering is a joining technology in which the joints are made by solder coming from a standing wave of liquid solder. The wave soldering process is suitable for the following:

- Through-hole components
- Leaded or leadless SMDs, which are glued to the surface of the printed circuit board

Not all SMDs can be wave soldered. Packages with solder balls, and some leadless packages which have solder lands underneath the body, cannot be wave soldered. Also, leaded SMDs with leads having a pitch smaller than ~0.6 mm cannot be wave soldered, due to an increased probability of bridging.

The reflow soldering process involves applying solder paste to a board, followed by component placement and exposure to a temperature profile. Leaded packages, packages with solder balls, and leadless packages are all reflow solderable.

Key characteristics in both wave and reflow soldering are:

- Board specifications, including the board finish, solder masks and vias
- Package footprints, including solder thieves and orientation
- The moisture sensitivity level of the packages
- Package placement
- Inspection and repair
- Lead-free soldering versus SnPb soldering

17.3 Wave soldering

Key characteristics in wave soldering are:

- Process issues, such as application of adhesive and flux, clinching of leads, board transport, the solder wave parameters, and the time during which components are exposed to the wave
- Solder bath specifications, including temperature and impurities

All information provided in this document is subject to legal disclaimers.

© NXP Semiconductors N.V. 2017. All rights reserved.

17.4 Reflow soldering

Key characteristics in reflow soldering are:

- Lead-free versus SnPb soldering; note that a lead-free reflow process usually leads to higher minimum peak temperatures (see Figure 41) than a SnPb process, thus reducing the process window
- Solder paste printing issues including smearing, release, and adjusting the process window for a mix of large and small components on one board
- Reflow temperature profile; this profile includes preheat, reflow (in which the board is heated to the peak temperature) and cooling down. It is imperative that the peak temperature is high enough for the solder to make reliable solder joints (a solder paste characteristic). In addition, the peak temperature must be low enough that the packages and/or boards are not damaged. The peak temperature of the package depends on package thickness and volume and is classified in accordance with Table 27 and 28

Table 27. SnPb eutectic process (from J-STD-020D)

Package thickness (mm)	Package reflow temperature (°C)	
	Volume (mm^3)	
	< 350	≥ 350
< 2.5	235	220
≥ 2.5	220	220

Table 28. Lead-free process (from J-STD-020D)

Package thickness (mm)	Package reflow temperature (°C)		
	Volume (mm^3)		
	< 350	350 to 2000	> 2000
< 1.6	260	260	260
1.6 to 2.5	260	250	245
> 2.5	250	245	245

Moisture sensitivity precautions, as indicated on the packing, must be respected at all times.

Studies have shown that small packages reach higher temperatures during reflow soldering, see Figure 41.

All information provided in this document is subject to legal disclaimers.

© NXP Semiconductors N.V. 2017. All rights reserved.

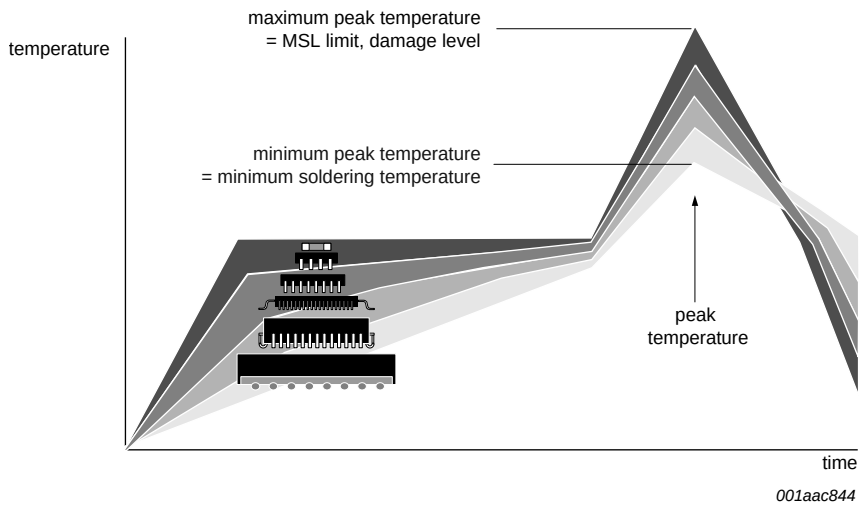

MSL: Moisture Sensitivity Level

Fig 41. Temperature profiles for large and small components

For further information on temperature profiles, refer to Application Note *AN10365 "Surface mount reflow soldering description"*.

All information provided in this document is subject to legal disclaimers.

© NXP Semiconductors N.V. 2017. All rights reserved.

18. Soldering: PCB footprints

Footprint information for reflow soldering of HVQFN16 package **SOT758-1**

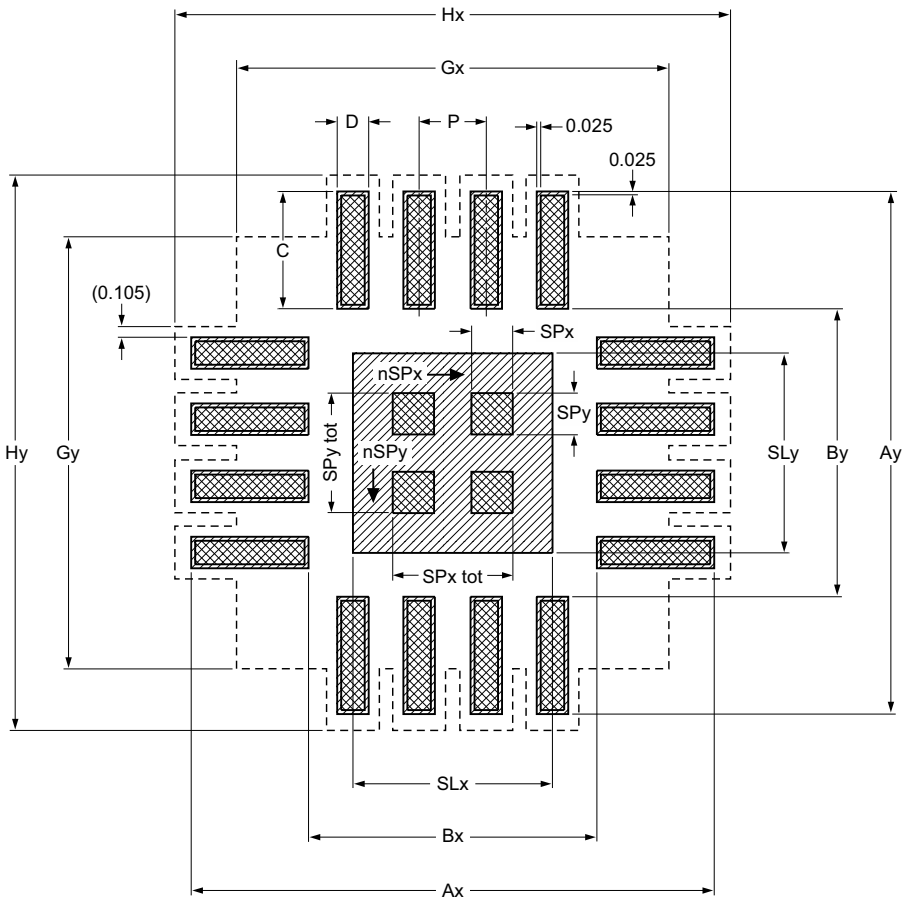

solder land

solder paste deposit

solder land plus solder paste

occupied area

nSPx	nSPy
2	2

Dimensions in mm

P	Ax	Ay	Bx	By	C	D	SLx	SLy	SPx tot	SPy tot	SPx	SPy	Gx	Gy	Hx	Hy
0.50	4.00	4.00	2.20	2.20	0.90	0.24	1.50	1.50	0.90	0.90	0.30	0.30	3.30	3.30	4.25	4.25

Issue date ~~12-03-07~~ 12-03-08 *sot758-1_fr*

Fig 42. PCB footprint for SOT758-1 (HVQFN16); reflow soldering

All information provided in this document is subject to legal disclaimers.

© NXP Semiconductors N.V. 2017. All rights reserved.

Footprint information for reflow soldering of TSSOP16 package **SOT403-1**

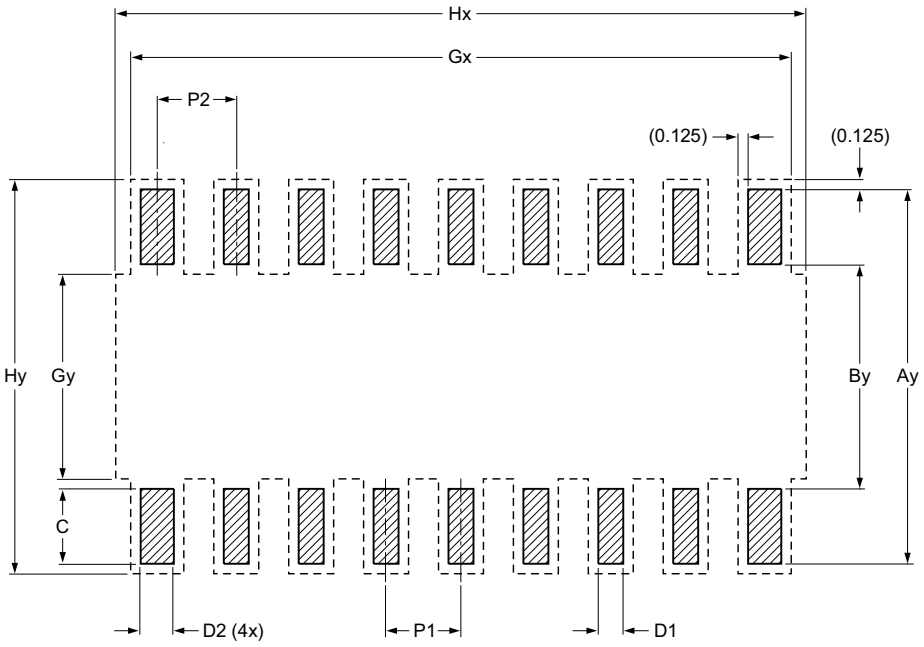

Generic footprint pattern

Refer to the package outline drawing for actual layout

solder land

occupied area

DIMENSIONS in mm

P1	P2	Ay	By	C	D1	D2	Gx	Gy	Hx	Hy
0.650	0.750	7.200	4.500	1.350	0.400	0.600	5.600	5.300	5.800	7.450

sot403-1_fr

Fig 43. PCB footprint for SOT403-1 (TSSOP16); reflow soldering

All information provided in this document is subject to legal disclaimers.

© NXP Semiconductors N.V. 2017. All rights reserved.

Footprint information for reflow soldering of XQFN16 package **SOT1161-1**

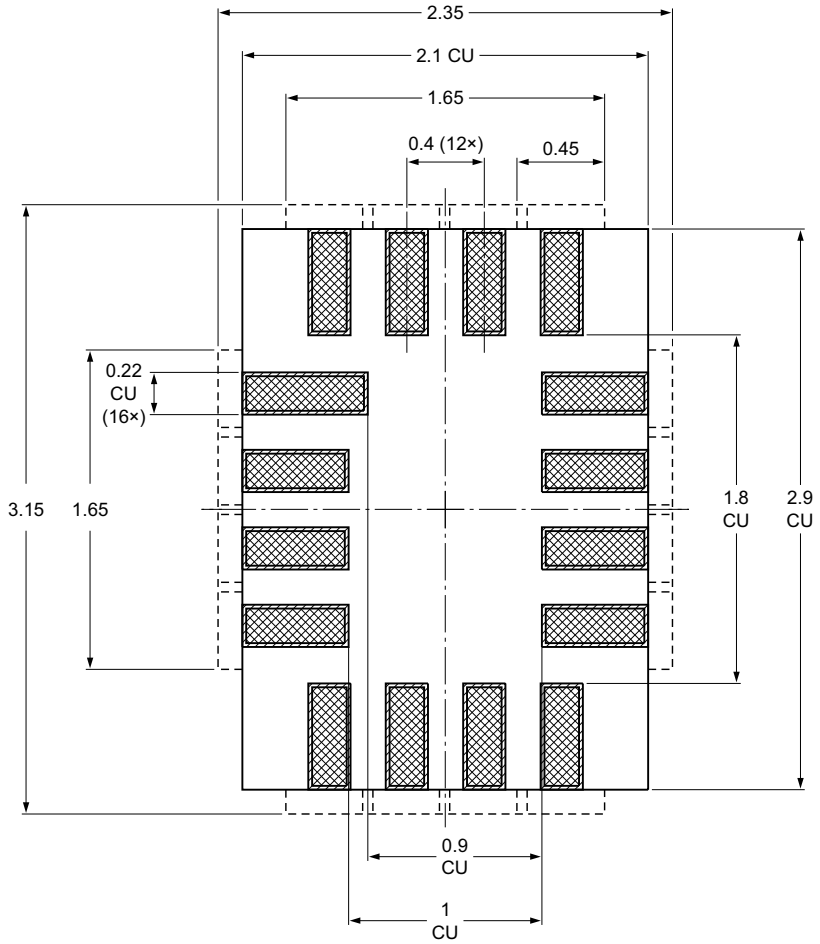

placement area

solder land

solder paste deposit, - 0.02 around copper, stencil thickness 0.1

occupied area

solder land plus solder paste

solder resist, 0.0625 around copper

clearance, 0.125 around occupied area

Dimensions in mm

sot1161-1_fr

Fig 44. PCB footprint for SOT1161-1 (XQFN16); reflow soldering

All information provided in this document is subject to legal disclaimers.

© NXP Semiconductors N.V. 2017. All rights reserved.

Footprint information for reflow soldering of X2QFN16 package **SOT1896-1**

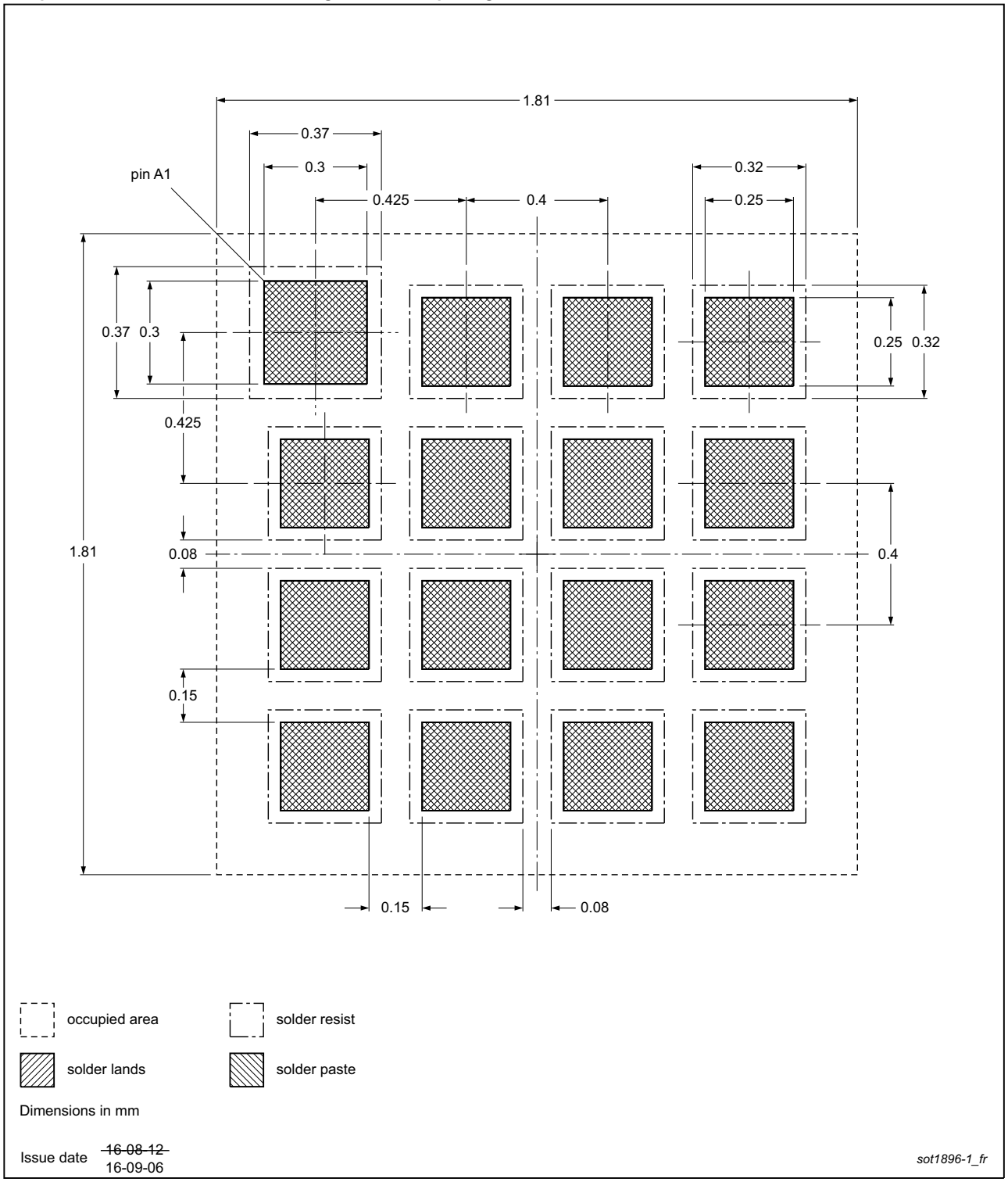

Fig 45. PCB footprint for SOT1896-1 (X2QFN16); reflow soldering

All information provided in this document is subject to legal disclaimers.

© NXP Semiconductors N.V. 2017. All rights reserved.

19. Abbreviations

Table 29. Abbreviations

Acronym	Description
ESD	ElectroStatic Discharge
FET	Field-Effect Transistor
GPIO	General-Purpose Input/Output
I^2C-bus	Inter-Integrated Circuit bus
I/O	Input/Output
LED	Light-Emitting Diode
LSB	Least Significant Bit
MSB	Most Significant Bit
PCB	Printed-Circuit Board
POR	Power-On Reset
SMBus	System Management Bus

20. Revision history

Table 30. Revision history

Document ID	Release date	Data sheet status	Change notice	Supersedes
PCAL6408A v.3.2	20170419	Product data sheet	-	PCAL6408A v.3.1
Modifications:	• Removed “PCAL6408AEX1/X2QFN16” from Figure 5 “Pin configuration for 1.6 mm ´ 1.6 mm XFBGA16” • Added Figure 6 “Pin configuration for 1.6 mm ´ 1.6 mm X2QFN16 EX1 land grid array” • Table 1 “Ordering information”, PCAL6408AEX1 topside mark changed from “18” to “18X”; added Table note 2 indicating topside marking work week; added “land grid array” to description • Table 3 “Pin description”, XFBGA16, X2QFN16: Corrected pin assignment from “D5” to “D4”			
PCAL6408A v.3.1	20161102	Product data sheet	-	PCAL6408A v.3
Modifications:	• Added PCAL6408AEX1			
PCAL6408A v.3	20130918	Product data sheet	-	PCAL6408A v.2

All information provided in this document is subject to legal disclaimers.

© NXP Semiconductors N.V. 2017. All rights reserved.

Table 30. Revision history *...continued*

Document ID	Release date	Data sheet status	Change notice	Supersedes
Modifications:	• Section 2 “Features and benefits”, 17th bullet item: added “XFBGA16” • Table 1 “Ordering information”: added Type number PCAL6408AEX • Table 2 “Ordering options”: added Type number PCAL6408AEX • Added (new) Figure 5 “Pin configuration for 1.6 mm × 1.6 mm XFBGA16” • Added (new) Figure 6 “Ball mapping for 1.6 mm × 1.6 mm XFBGA16” • Table 3 “Pin description”: added column “XFBGA16” • Table 6 “Command byte”, register “Output port configuration”: – Pointer register bits corrected from “0100 0111” to “0100 1111” (correction to documentation, no functional change to device) – Command byte corrected from “47h” to “4Fh” (correction to documentation, no functional change to device) • Section 7.4.11 “Output port configuration register (4Fh)”: – register number corrected from “47h” to “4Fh” in Section title (correction to documentation, no functional change to device) – first paragraph, third sentence: register number corrected from “(47h)” to “(4Fh)” (correction to documentation, no functional change to device) – register number corrected from “47h” to “4Fh” in title of Table 18 (correction to documentation, no functional change to device) • Added (new) Figure 39 “Package outline SOT1354-1 (XFBGA16)”			
PCAL6408A v.2	20121206	Product data sheet	-	PCAL6408A v.1
PCAL6408A v.1	20120906	Product data sheet	-	-

All information provided in this document is subject to legal disclaimers.

© NXP Semiconductors N.V. 2017. All rights reserved.

21. Legal information

21.1 Data sheet status

Document status[1][2]	Product status[3]	Definition
Objective [short] data sheet	Development	This document contains data from the objective specification for product development.
Preliminary [short] data sheet	Qualification	This document contains data from the preliminary specification.
Product [short] data sheet	Production	This document contains the product specification.

[1] Please consult the most recently issued document before initiating or completing a design.

[2] The term 'short data sheet' is explained in section "Definitions".

[3] The product status of device(s) described in this document may have changed since this document was published and may differ in case of multiple devices. The latest product status information is available on the Internet at URL http://www.nxp.com.

21.2 Definitions

Draft — The document is a draft version only. The content is still under internal review and subject to formal approval, which may result in modifications or additions. NXP Semiconductors does not give any representations or warranties as to the accuracy or completeness of information included herein and shall have no liability for the consequences of use of such information.

Short data sheet — A short data sheet is an extract from a full data sheet with the same product type number(s) and title. A short data sheet is intended for quick reference only and should not be relied upon to contain detailed and full information. For detailed and full information see the relevant full data sheet, which is available on request via the local NXP Semiconductors sales office. In case of any inconsistency or conflict with the short data sheet, the full data sheet shall prevail.

Product specification — The information and data provided in a Product data sheet shall define the specification of the product as agreed between NXP Semiconductors and its customer, unless NXP Semiconductors and customer have explicitly agreed otherwise in writing. In no event however, shall an agreement be valid in which the NXP Semiconductors product is deemed to offer functions and qualities beyond those described in the Product data sheet.

21.3 Disclaimers

Limited warranty and liability — Information in this document is believed to be accurate and reliable. However, NXP Semiconductors does not give any representations or warranties, expressed or implied, as to the accuracy or completeness of such information and shall have no liability for the consequences of use of such information. NXP Semiconductors takes no responsibility for the content in this document if provided by an information source outside of NXP Semiconductors.

In no event shall NXP Semiconductors be liable for any indirect, incidental, punitive, special or consequential damages (including - without limitation - lost profits, lost savings, business interruption, costs related to the removal or replacement of any products or rework charges) whether or not such damages are based on tort (including negligence), warranty, breach of contract or any other legal theory.

Notwithstanding any damages that customer might incur for any reason whatsoever, NXP Semiconductors' aggregate and cumulative liability towards customer for the products described herein shall be limited in accordance with the *Terms and conditions of commercial sale* of NXP Semiconductors.

Right to make changes — NXP Semiconductors reserves the right to make changes to information published in this document, including without limitation specifications and product descriptions, at any time and without notice. This document supersedes and replaces all information supplied prior to the publication hereof.

Suitability for use — NXP Semiconductors products are not designed, authorized or warranted to be suitable for use in life support, life-critical or safety-critical systems or equipment, nor in applications where failure or malfunction of an NXP Semiconductors product can reasonably be expected to result in personal injury, death or severe property or environmental damage. NXP Semiconductors and its suppliers accept no liability for inclusion and/or use of NXP Semiconductors products in such equipment or applications and therefore such inclusion and/or use is at the customer's own risk.

Applications — Applications that are described herein for any of these products are for illustrative purposes only. NXP Semiconductors makes no representation or warranty that such applications will be suitable for the specified use without further testing or modification.

Customers are responsible for the design and operation of their applications and products using NXP Semiconductors products, and NXP Semiconductors accepts no liability for any assistance with applications or customer product design. It is customer's sole responsibility to determine whether the NXP Semiconductors product is suitable and fit for the customer's applications and products planned, as well as for the planned application and use of customer's third party customer(s). Customers should provide appropriate design and operating safeguards to minimize the risks associated with their applications and products.

NXP Semiconductors does not accept any liability related to any default, damage, costs or problem which is based on any weakness or default in the customer's applications or products, or the application or use by customer's third party customer(s). Customer is responsible for doing all necessary testing for the customer's applications and products using NXP Semiconductors products in order to avoid a default of the applications and the products or of the application or use by customer's third party customer(s). NXP does not accept any liability in this respect.

Limiting values — Stress above one or more limiting values (as defined in the Absolute Maximum Ratings System of IEC 60134) will cause permanent damage to the device. Limiting values are stress ratings only and (proper) operation of the device at these or any other conditions above those given in the Recommended operating conditions section (if present) or the Characteristics sections of this document is not warranted. Constant or repeated exposure to limiting values will permanently and irreversibly affect the quality and reliability of the device.

Terms and conditions of commercial sale — NXP Semiconductors products are sold subject to the general terms and conditions of commercial sale, as published at http://www.nxp.com/profile/terms, unless otherwise agreed in a valid written individual agreement. In case an individual agreement is concluded only the terms and conditions of the respective agreement shall apply. NXP Semiconductors hereby expressly objects to applying the customer's general terms and conditions with regard to the purchase of NXP Semiconductors products by customer.

No offer to sell or license — Nothing in this document may be interpreted or construed as an offer to sell products that is open for acceptance or the grant, conveyance or implication of any license under any copyrights, patents or other industrial or intellectual property rights.

All information provided in this document is subject to legal disclaimers.

© NXP Semiconductors N.V. 2017. All rights reserved.

Export control — This document as well as the item(s) described herein may be subject to export control regulations. Export might require a prior authorization from competent authorities.

Non-automotive qualified products — Unless this data sheet expressly states that this specific NXP Semiconductors product is automotive qualified, the product is not suitable for automotive use. It is neither qualified nor tested in accordance with automotive testing or application requirements. NXP Semiconductors accepts no liability for inclusion and/or use of non-automotive qualified products in automotive equipment or applications.

In the event that customer uses the product for design-in and use in automotive applications to automotive specifications and standards, customer (a) shall use the product without NXP Semiconductors' warranty of the product for such automotive applications, use and specifications, and (b) whenever customer uses the product for automotive applications beyond NXP Semiconductors' specifications such use shall be solely at customer's own risk, and (c) customer fully indemnifies NXP Semiconductors for any liability, damages or failed product claims resulting from customer design and use of the product for automotive applications beyond NXP Semiconductors' standard warranty and NXP Semiconductors' product specifications.

Translations — A non-English (translated) version of a document is for reference only. The English version shall prevail in case of any discrepancy between the translated and English versions.

21.4 Trademarks

Notice: All referenced brands, product names, service names and trademarks are the property of their respective owners.

I²C-bus — logo is a trademark of NXP B.V.

22. Contact information

For more information, please visit: **http://www.nxp.com**

For sales office addresses, please send an email to: **salesaddresses@nxp.com**

All information provided in this document is subject to legal disclaimers.

© NXP Semiconductors N.V. 2017. All rights reserved.

23. Contents

1 General description 1
2 Features and benefits 2
2.1 Agile I/O features 3
3 Ordering information 3
3.1 Ordering options 4
4 Block diagram 4
5 Pinning information 5
5.1 Pinning 5
5.2 Pin description 6
6 Voltage translation 8
7 Functional description 8
7.1 Device address 8
7.2 Interface definition 9
7.3 Pointer register and command byte 9
7.4 Register descriptions 10
7.4.1 Input port register (00h) 10
7.4.2 Output port register (01h) 10
7.4.3 Polarity inversion register (02h) 10
7.4.4 Configuration register (03h) 10
7.4.5 Output drive strength registers (40h, 41h) . . . 11
7.4.6 Input latch register (42h) 11
7.4.7 Pull-up/pull-down enable register (43h) 12
7.4.8 Pull-up/pull-down selection register (44h) 12
7.4.9 Interrupt mask register (45h) 12
7.4.10 Interrupt status register (46h) 13
7.4.11 Output port configuration register (4Fh) 13
7.5 I/O port 14
7.6 Power-on reset 15
7.7 Reset input ($\overline{\text{RESET}}$) 15
7.8 Interrupt output ($\overline{\text{INT}}$) 15
8 Bus transactions 16
8.1 Write commands 16
8.2 Read commands 17
9 Application design-in information 19
9.1 Minimizing I_{DD} when I/Os control LEDs 19
9.2 Output drive strength control 20
9.3 Power-on reset requirements 21
9.4 Device current consumption with internal pull-up and pull-down resistors 23
10 Limiting values 24
11 Recommended operating conditions 24
12 Thermal characteristics 25
13 Static characteristics 25
13.1 Typical characteristics 28
14 Dynamic characteristics 32
15 Parameter measurement information 33
16 Package outline 37
17 Soldering of SMD packages 42
17.1 Introduction to soldering 42
17.2 Wave and reflow soldering 42
17.3 Wave soldering 42
17.4 Reflow soldering 43
18 Soldering: PCB footprints 45
19 Abbreviations 49
20 Revision history 49
21 Legal information 51
21.1 Data sheet status 51
21.2 Definitions 51
21.3 Disclaimers 51
21.4 Trademarks 52
22 Contact information 52
23 Contents 53

Please be aware that important notices concerning this document and the product(s) described herein, have been included in section 'Legal information'.

© NXP Semiconductors N.V. 2017. All rights reserved.

For more information, please visit: http://www.nxp.com
For sales office addresses, please send an email to: salesaddresses@nxp.com

Date of release: 19 April 2017
Document identifier: PCAL6408A